DANGEROUS GASES IN DISTILLATION AND REFINING PROCESSES.*

By E. le Q. Herbert, B.Sc., F.I.C.†

BIBLIOTEKA POLITECHNIKI ŚLĄSKIEJ

(1) Distillation Processes.

In the various processes for the distillation of crude petroleum, redistillation of petroleum distillates or residues, the most dangerous and most poisonous gas encountered is hydrogen sulphide (H_2S). However, hydrocarbon vapours given off by crude petroleum, gasoline and other petroleum products cause anæsthetic effects and are dangerous, in so far as workmen may be overcome by the inhalation of such vapours. Hydrocarbon vapours are also dangerous from the point of view of inflammability, mixtures of vapour and air forming, when the volume of vapour is within certain limiting percentages of the total, a combustible or explosive mixture. Considerable care is required, therefore, wherever these vapours may exist, to prevent the occurrence of fires or explosions, and the strictest precautions have to be taken to avoid (*a*) the formation of explosive mixtures in places where these should not occur, and (*b*) the ignition of such mixtures in places where they unavoidably exist.

Columns, heaters and other vessels connected with the distillation units, as well as tanks which have contained crude oil or light-petroleum products, have to be cleaned, inspected and repaired at regular intervals, and as such tanks will contain petroleum vapours, special precautions have to be taken in this connection. As hydrocarbon vapours are universally encountered wherever petroleum or its products are distilled, the hazards arising from them and the precautions taken to provide the necessary protection will be dealt with first.

Petroleum Vapours.

Vapours of petroleum, gasoline and other petroleum products cause anæsthetic effects when inhaled, and unless the necessary precautions are taken, such effects may be encountered by workers in refineries, installations, factories such as dry-cleaning plants and others, where gasoline or other light-petroleum products are encountered. Occasionally men have been overcome, and some have died, in consequence of breathing such vapours.

Inhalation of gasoline and other volatile hydrocarbons given off by petroleum causes headache, dizziness and frequently an intoxication in which the victim becomes excited and hysterical. Experiments made by the U.S. Bureau of Mines [1] have shown that the odour of gasoline is noticeable in inhaled air containing 0·03 per cent. gasoline; in air containing 0·07 per cent. increasing to 0·28 per cent. gasoline a man became dizzy at

* This and the following papers were among those presented at the Symposium on "Dangerous Gases in the Petroleum and Allied Industries" held at the Royal Society of Arts on 14th March, 1939. The remaining papers together with the Discussion will be published in the July Journal.

† Shell Refineries, Ltd., Shell Haven.

the end of 14½ minutes; in a concentration of 1·13 to 2·22 per cent. for 3 minutes a man became so dizzy that he was compelled to hold fast to a table to be able to stand; in a concentration increasing from 2·22 to 2·60 per cent., a man became dizzy after ten to twelve breaths. Experiments by Haggard [2] have shown that when dogs were placed in pure air to which gasoline vapour was gradually added, convulsions always occurred when 1 per cent. concentration of gasoline vapour was attained, although the periods of exposure varied from 12 to 35 minutes; this was followed by immobility when the concentration reached 1·6 per cent. after total exposure of 16 to 44 minutes. After a total exposure of 28 minutes, at which time the concentration was 2·3 per cent. anæsthesia resulted and 4 minutes later the dog died. The final concentration was 2·6 per cent. Thus the stage between unconsciousness and death is very narrow, making the vapours of the higher hydrocarbons dangerous anæsthetics.

High concentrations of the vapours quickly overcome the victims, causing insensibility and death. However, if a victim still living is removed to fresh air and given artificial treatment, he usually recovers.

Adequate protection against hydrocarbon vapours in vessels or tanks may be obtained by the use of gas-masks. Two types of equipment are generally used to protect workmen against such vapours, the hose mask and the canister mask. Hose masks consist of a face mask or mouthpiece attached to a length of hose through which the wearer inhales fresh air. The length of hose limits the distance a man may go from pure air into the gas-containing atmosphere, but air may be drawn through the hose up to lengths of 100–150 feet without undue exertion. 25-feet lengths of hose are generally available, and may be joined together. Hose masks can also be obtained in which the air is supplied by means of a small hand-driven rotary blower. It is important that the blower is of such a type that air is supplied to the mask with either direction of rotation, and so constructed that no restriction to natural breathing is caused by its failure to operate. Hose masks are the safer type, as they protect against any kind of dangerous vapour or gas that the skin of the wearer can endure, and are not limited by the concentration of gas.

The canister gas-mask will protect the wearer only for a limited time against the vapours, and should not be used in concentrations of hydrocarbon vapours exceeding 2 per cent. The canister mask in general use in the petroleum industry for protection against petroleum vapours contains soda lime to remove hydrogen sulphide and activated charcoal to remove the petroleum vapours.

Where gas-masks are kept ready for occasional use—either in emergency or otherwise—careful supervision is required to ensure that the masks are carefully stored, regularly inspected and, in general, every precaution taken to see that such masks are in perfect condition to give the full protection expected of them. This applies to all types of gas-masks, whether canister or hose, and whether for organic vapours such as petroleum gas or acidic or alkaline gases. A careful record must be kept of the use of each canister mask, the number of hours it has been worn in a gas-containing atmosphere being recorded as well as the date when the canister was put in service. The canister should be scrapped and replaced by a fresh one after about 10 hours of total usage or after 6 months, irrespective of actual

usage, whichever period ends first. In order to ensure that this is carried out, it is good practice for each canister mask to be kept in a separate container sealed with paper or other suitable material, on which the date of issue, date of last usage, and number of hours of usage are recorded. In practice, the actual life of a canister depends on the concentration of gas in the atmosphere in which it is used. If used continuously in an atmosphere containing from 1 to 2 per cent. of petroleum vapour, 100 per cent. efficiency will only be obtained for about 1½ to 2 hours. However, for use in connection with tank gauging or other similar purposes where the gas concentration is low, the life of the canister will be correspondingly increased. For example, the special canisters supplied with this type of mask for use in tetra ethyl lead blending plants are normally used for 100 hours before being discarded. In actual practice, however, the canister-type of gas-mask should not be used in any enclosed space, such as a tank, still, or similar vessel, in which a high concentration of gas might exist. In such gases a hose mask with a positive air supply should be used.

Certain types of self-contained oxygen-breathing apparatus can also be used to give protection in any kind of irrespirable atmosphere. Such apparatus is, however, somewhat heavy and bulky, and the wearer requires special training before it can be used with safety.

The various types of masks are compared in Table 1.

Inflammable Vapours.

Petroleum vapours are also dangerous in so far as they are highly inflammable and, when mixed with the correct proportion of air (oxygen), form explosive mixtures. The explosive mixture limits for gasoline in air have been determined to be between 1·45 and 6·2 per cent. by volume,[3] and are generally accepted to be from 1 to 6 per cent. by volume.[4] However, for other hydrocarbon vapours—*e.g.*, methane and ethane—such as occur in natural gas, the explosive limits are approximately 5 and 15 per cent. by volume,[5, 6] whilst other petroleum vapours may have lower or higher limits, depending on their composition. For example, vapours from hot heavy oils may be burned when present at as low a concentration as 0·4 per cent. whilst vapours mainly consisting of propane, butane or pentane may burn when they consititute 8 or 9 per cent. by volume of the mixture. For hydrogen sulphide the explosive limits in air are variously given as from 5·9 to 27·2 per cent [20] and 4·3 to 46·0 per cent.[3]

The main sources of inflammable vapours which might collect around distillation units and so become hazardous—*e.g.*, in sewers and drains—arise from leaks in process lines and fittings, pumps, sample lines, etc. Leaks in receiving-house lines or pumps, and lines and valves in the control-house, are additional sources which may cause explosive mixtures to be formed. The prevention of fires and explosions from such causes depend mainly on sound engineering design and construction of the plant and equipment in the first instance, and, thereafter, on the proper maintenance of the plant in first-class operating condition. Provided these two important points are watched, hazards of this nature should not arise.

In view of the hazardous nature of petroleum vapours, the most careful

TABLE I.

Comparison of Advantages and Limitations of Gas Masks, Hose Masks, and Oxygen-Breathing Apparatus for Protection from Petroleum Vapours and from Hydrogen Sulphide.

Conditions.	Gas-masks.	Hose masks.	Oxygen apparatus.
Protection in atmospheres deficient in oxygen (less than 16 per cent. oxygen).	Gas-masks do not protect against atmospheres deficient in oxygen, and should not be used therein.	Protect against all deficiencies of oxygen, since they are not dependent on air surrounding the wearer.	Protect against all deficiencies of oxygen. They are not dependent on air surrounding the wearer.
Protection in low concentrations of petroleum vapours (average 2 per cent. and maximum 5 per cent. in air).	Gas-masks with canister containing 600 c.c. or more of activated charcoal protect. Time of protection decreases rapidly as concentration increases.	Protect against any concentration.	Protect against any concentration.
Protection in high concentrations of petroleum vapours (exceeding 5 per cent. in air).	Canister gas-masks do not give sufficient protection, and should not be used.	Ditto.	Ditto.
Protection in low concentrations of hydrogen sulphide (average 1 per cent. and not exceeding 2 per cent. in air).	Gas-masks with canisters containing 600 c.c. or more of soda lime or caustic soda fused on pumice granules protect. Time of protection decreases rapidly as concentration increases. Canisters containing only dry activated charcoal last only about one-fifth as long as those containing soda lime.	Ditto.	Ditto.

Protection in high concentrations of hydrogen sulphide (exceeding 2 per cent. in air).	Canister gas-masks do not give sufficient protection, and should not be used.	Ditto.	Ditto.
Protection against mixtures of petroleum vapours and hydrogen sulphide in air.	Gas-masks with canisters containing a mixture of charcoal and soda lime should be used. Time of protection against petroleum vapours depends on volume of charcoal in the mixture and against hydrogen sulphide on the volume of soda lime. Recommended mixture 600 c.c. soda lime plus 900 c.c. charcoal.	Ditto.	Ditto.
Protection against other dangerous gases or vapours.	Charcoal canisters protect against organic vapours, aniline, benzene, ether, toluene, acetone, methyl ethyl ketone, furfural, etc., in concentrations similar to those of petroleum vapours. Soda lime canisters protect against acid gases, such as chlorine, hydrogen chloride, sulphur dioxide, etc. Copper sulphate on pumice stone granules protects against ammonia.	Ditto.	Ditto.

control must be exercised in the cleaning of storage tanks and other vessels which have contained crude petroleum, gasoline or other light oils. The gas-freeing of such vessels requires careful supervision, and special tests must be carried out to determine whether the atmosphere inside any such vessel is actually " gas free " and suitable for men to work in and perform the necessary inspection or repair work. Various methods can be adopted for the gas-freeing of storage tanks and other vessels, and many companies have their own particular methods which have been standardized. Reference may be made in this connection to the manual on the cleaning of petroleum storage tanks published by the American Petroleum Institute, Division of Refining.

In passing, it may be mentioned that particular precautions require to be taken in the gas-freeing of storage tanks or other vessels which have contained products rich in sulphur compounds, on account of the possibility of the existence in such tanks of pyrophoric iron compounds which, in the presence of oxygen, may oxidize so rapidly that they glow, and so ignite an explosive mixture. As, during the process of gas-freeing a tank, there must come a time between the atmosphere being too rich and too poor in hydrocarbon vapour to be explosive, it is essential to take such precautions as will avoid any pyrophoric iron present glowing, and so causing an explosion. It is necessary, therefore, during such gas-freeing operations (*a*) to prevent the entry of air into the tank, so far as is possible, and (*b*) to keep the internal surfaces of the tank wet until the tank is gas-free.

Various methods and instruments are available for the detection of dangerous gas–air mixtures in tanks or other vessels. The Burrell indicator[7] was developed originally for detecting methane in mines, but it may also be used for detecting the presence of explosive or asphyxiating gasoline vapours in air. More recently various other combustible-gas indicators have been developed: the U.C.C., M.S.A., F.M., the " Spiralarm " and the McLuckie indicators, to mention but a few. The general principle of operation of these instruments, which are portable, is the same. Each utilizes the heating effect of combustion of inflammable gas and air mixtures on the surface of a heated filament to increase the temperature, and consequently the electrical resistance of the filament. The change in resistance to flow of an electric current due to increased temperature of the filament moves the needle of a resistance meter over a scale, from which the desired information relative to gas conditions can be read. Certain special instruments, known as all-service gas indicators, can be used not only for the indication of dangerous percentages of combustible gases, but also for the detection of toxic gases such as carbon monoxide and hydrogen sulphide, and for neutral gases such as carbon dioxide and nitrogen, which reduce the oxygen content of air, and thus may cause asphyxiation. Such an instrument will indicate any concentration of gas above the upper explosive limit; concentations within the explosive range, and gas concentrations below the lower limit of inflammability. It comprises essentially a combustible-gas indicator unit, a toxic-gas detector unit of simple design and a small safety lamp of special design for determining deficiency of oxygen.

The actual testing of tanks or vessels for freedom from gas is, in most refineries, allotted only to a responsible qualified chemist; and it is usual practice to require a certificate to be signed by the chemist conducting the

tests, to the effect that the tank or vessel in question has been tested and found to be satisfactorily gas-free according to the standards required by the particular organisation. In this connection it is essential that the chemist is entirely satisfied that the tank or vessel is safe for men to work in, and the only thing which should concern him is the safety or otherwise of issuing the required certificate. No matter what delay in work or what other consequence may follow, the absence of the desired certificate must be of no consequence to the chemist, and there should on no account be any tendency to influence the chemist to issue a certificate without proper examination, or before he is absolutely satisfied that the tank or vessel is safe. In certain cases a tank may contain sludge or emulsion which has to be cleaned out. In stirring up this material for removal, the possibility exists of gas being released and the concentration of gas in the tank increasing. In such cases the chemist must see to it that further tests are carried out shortly after workers have entered the tank, and such tests must be continued throughout the work.

While according to most accepted figures an atmosphere containing more than 0·2 per cent. by volume of petroleum vapour is considered toxic, it is not good practice to assume that any concentration below this figure is safe for workmen to work in. In many refineries an atmosphere is not considered as gas-free unless the concentration of vapour is less than 0·04 per cent. by volume, and this figure is accepted only when the possibility of further development of vapour is ascertained to be non-existent by further tests. Where tanks must be cleaned out thoroughly for repairs involving the use of sparking tools or fire—*e.g.*, welding—suggested standards governing the entry of men into the tank for cleaning may be as follows :—

0·04–0·07 per cent. petroleum vapour : work ½ hour, rest 10 minutes.
0·07–0·10 per cent. petroleum vapour : work 10 minutes, rest 10 minutes.
over 0·10 per cent. petroleum vapour : keep out.

Fire Permits.

The use of spark-producing tools or the carrying out of welding or cutting operations constitutes " hot work," which also includes the heating and driving of rivets, the operation of blow-lamps or lead-melting pots and similar uses of torches or flames. Practically all refineries follow a definite routine procedure to ensure that such hot work is not begun before all the necessary precautions have been taken. In most refineries certain sections of the plant in which such work can be carried out without special permission, such as mechanical shop, boiler shops and so on, are situated and set aside, so that the necessary class of work can be carried on safely without a special fire permit. All other sections of the plant, particularly those in which distillation units, treating plants, etc., storage or receiving tanks, etc., are situated, are considered as being in the danger area. Tanks, receiving-houses, pump-houses, closed vessels such as stills, towers, pipe-lines, condensers, coils and similar equipment represent risks, and special permission must be obtained from an executive or someone authorised to issue fire permits before hot work can be done. In most

refineries a special fire permit must be obtained before any welding or cutting work or any work involving the use of spark-producing tools can be begun. It is generally arranged that such permits must be signed by a chemist who has personally investigated the site, tank or vessel in question, tested for gas and satisfied himself as to the conditions. The permit should then be approved by the manager or superintendent, so as to place the final responsibility upon one executive officer. It is also a general rule that such permits are issued only for a limited time, and must be renewed from day to day, or from shift to shift, as may be necessary for any particular job. Specimen copies of (*a*) safety certificate for tank repairs, etc., (*b*) fire permit, and (*c*) permit to carry matches as used in one refinery, are given (Figs. 1, 2 and 3).

When a distillation unit or any similar type of plant is shut down for inspection and repairs, it is essential that all hydrocarbon vapours are removed from the system by thorough steaming and ventilation. It is also common practice to disconnect and blank off all lines and connections through which vapours, steam or oil might enter the system, and it is part of the chemist's duty, when inspecting such equipment prior to issuing a safety certificate, to satisfy himself that all such precautions have in fact been taken. Particular care requires to be taken when inspecting tanks or other vessels prior to issuing a gas-free or safety certificate, to examine such points as upturned elbows, swing pipes or other similar features which may have entrapped liquid or vapour. Foam delivery boxes which may have become filled with liquid through the overfilling of the tanks and on account of the drain plugs being choked, and hollow supports of tank roofs are other points which require particular inspection.

TABLE II.

Approximate Limits of Inflammability of Single Gases and Vapours in Air at Ordinary Temperatures and Pressures.[3]

Gas.	Lower limit, per cent. by vol.	Upper limit, per cent. by vol.
Hydrogen	4·1	74
Ammonia	16 *	27 *
Hydrogen sulphide	4·3 *	46 *
Carbon disulphide	1·0 *	50 *
Carbon monoxide	12·5	74
Methane	5·3	14
Methane (turbulent mixture)	5·0	15
Ethane	3·2	12·5
Propane	2·4	9·5
Butane	1·9	8·5
Pentane	1·4 *	8·0 *
Ethylene	3·3	—
Acetylene	2·5	—
Benzene	1·4 *	8·0
Toluene	1·3 *	7·0 *
Acetone	2 or 3 *	13·0 *
Methyl ethyl ketone	2 *	12·0 *
Gasoline	1·45	6·2

Values observed are for upward propagation of flame in large vessels, unless the value is marked with (*) to represent experiments with mixtures in closed or small vessels.

Certificate No.....

CERTIFICATE OF SAFETY FOR TANK REPAIRS, ETC.

Tank No.

Rail Car No.

Road Car No.

was personally inspected by me and was tested on
and

(1) is hereby certified gas free and safe for work

(*a*) Involving sparks, flames, etc.
(*b*) Not involving sparks, flames, etc.

(2) Was found to be safe for work, providing the following precautions to avoid sparking are followed :—

Chemist .....

Date .....

Note.—Terms not applicable must be crossed out.
Application for this certificate was made by ..... for ..... Upon expiry it must be returned to the Fire Station.

FIG. 1.

FIRE PERMIT.

THE BEARER, Mr. has permission to have fires at the following places, viz. :—

TO BE EXTINGUISHED IN CASE OF EMERGENCY.

FROM TO

The bearer of this permit is responsible for the fire being properly extinguished after use.
This permit must be handed in to the Chief Patrol's Office at night.

Manager .....

FIG. 2.

PERMIT TO CARRY MATCHES.

PERMISSION IS HEREBY GRANTED TO
TO CARRY MATCHES FOR THE PURPOSE DETAILED HEREUNDER.

MATCHES TO BE OBTAINED FROM FIRE DEPT. ON SIGNATURE EACH MORNING AND RETURNED BEFORE LEAVING WORK. MATCHES ISSUED FOR A SPECIAL JOB MUST BE RETURNED ON COMPLETION OF SAME.

MATCHES MUST NEVER BE USED UNLESS A COVERING FIRE PERMIT HAS FIRST BEEN ISSUED.

FROM TO

SIGNED .....

FIG. 3.

At distillation units handling crude oil or for the distillation of light petroleum products or, alternatively, in distillation units handling heavy oil at high temperatures where a small amount of "cracking" may occur, it is customary to have the system so arranged that all light, uncondensed still gases are collected and burnt as fuel under the heaters or boilers. Fuel value is thus obtained from such gases, and the undesirable practice of allowing them to escape to atmosphere or, alternatively, merely burning such gas in a field flare is overcome.

Hydrogen Sulphide (H_2S).

As previously mentioned, hydrogen sulphide is the most important poisonous gas encountered in refinery operation. It is found usually in admixture with the petroleum vapours and fixed gases resulting from distillation, in which case it is usually burnt as fuel gas. Toxic quantities of hydrogen sulphide may be evolved from four main sources :—

(*a*) From solution in crude oil or in untreated distillates.
(*b*) From decomposition of sulphur compounds or interaction of free sulphur with hydrocarbons when heated.
(*c*) From aqueous solutions.
(*d*) From action of acids on inorganic sulphide.

Some crude oils, especially those from Texas, Mexico and Iran, contain considerable quantities of hydrogen sulphide in solution.

Hydrogen sulphide will be liberated from crude oil at atmospheric temperature and pressure at only a slow rate, being dependent on the law of partial pressures. However, when the oil is distilled, the liberation rate increases with the temperature. The gas evolved by this method is also augmented by that resulting from the decomposition of sulphur compounds in the crude, and from the interaction between free sulphur and hydrocarbons. As previously mentioned, the gases evolved during distillation processes are usually collected and used as fuel either directly or after further processing.

Hydrogen sulphide will also be present in water which may settle out in tanks containing crude oil or untreated distillates containing this gas, and this water must be treated as a dangerous waste.

Waste caustic solutions and waste plumbite liquors which have been used for the treatment of oils containing hydrogen sulphide may also be the source of this gas, as admixture of such solutions with acids may release the hydrogen sulphide. Finally, lead sulphide, formed by the Doctor treatment of gasolines, etc., is a further potential source of hydrogen sulphide which is released when this material is acidified.

Physiological Effects of Hydrogen Sulphide.

Hydrogen sulphide has an exceedingly disagreeable odour, generally described as being similar to that of rotten eggs, when greatly diluted in air. In some ways this is fortunate, as the gas can easily and quickly be detected in low concentrations. However, high concentrations of the gas quickly deaden the sense of smell, and thus make the gas very treacherous.

The physiological effects attending exposure to various concentrations of hydrogen sulphide in air are reported by Yant [8] to be as follows :—

0·005–0·010 per cent. Subacute poisoning—slight symptoms such as mild conjunctivitis and respiratory tract irritation after one hour exposure.

0·02–0·03 per cent. Subacute poisoning—marked conjunctivitis and respiratory tract irritation after one hour exposure.

0·05–0·07 per cent. Subacute poisoning—dangerous in $\frac{1}{2}$ hour.

0·07–0·010 per cent. Possibly acute poisoning—rapid unconsciousness, cessation of respiration and death.

0·10–0·20 per cent. Acute poisoning—rapid unconsciousness, cessation of respiration and death in a few minutes.

While certain authorities give the lowest detectable concentration in air as being one part in one million,[10] Yant [8] indicates that this concentration is much less, viz., 0·13 part per million as follows :—

TABLE III.

Odour Intensities for Various Concentrations of Hydrogen Sulphide in Air.

Intensity of odour.	Parts per million.	Percentage by volume.
No odour	0·022	0·0000022
Detectable; minimum perceptible odour . . .	0·13	0·000013
Faint; weak odour, readily perceptible . . .	0·77	0·000077
Easily noticeable; moderate intensity . . .	4·6	0·00046
Strong; cogent, forceful, not intolerable . . .	27·0	0·0027

Hydrogen sulphide can be detected by the use of an all-service gas detector or by the use of lead acetate paper, which is discoloured when exposed to the gas. While this latter test is useful as an indicator test, it will not indicate the percentage of hydrogen sulphide present in the air.

Canister-type gas masks containing a mixture of soda lime and charcoal give protection against both H_2S and petroleum vapours, but such masks should not be used in air containing more than 2 per cent. of hydrogen sulphide or hydrogen sulphide plus petroleum vapour. For hydrogen sulphide only, the canister (600-c.c.) filled with soda lime gives better protection, as it will protect against an atmosphere containing 1 per cent. H_2S for 17 minutes. Soda lime, however, does not protect against hydrocarbon vapours. The straight, charcoal-filled canister will only protect against 1 per cent. of H_2S in air for about $3\frac{1}{2}$ minutes.

Hydrogen sulphide can also form explosive mixtures with air, the generally accepted limits of inflammability being 4·3 per cent. volume for the lower and 46 per cent. volume for the upper.[3]

(2) REFINING PROCESSES.

Dangerous gases and vapours are also to be encountered in refining practice in connection with the various processes commonly carried out in the petroleum industry. In dealing with these it is convenient to divide

the different refining methods into two main groups: (*a*) conventional treating methods and (*b*) solvent extraction methods. The first group includes old-established treating reagents such as sulphuric acid, caustic soda, plumbite solution, sodium or calcium hypochlorite, etc. In this group will be included sulphur dioxide, which more truly comes under the classification of a solvent, but in so far as this gas is also one of the products of refining with sulphuric acid, it can more conveniently be dealt with under this heading. Other gases included in the group are ammonia and carbon dioxide, both of which are commonly used in connection with refrigeration machinery, the former especially in wax plant operation. Ammonia is also extensively used in distillation processes as a means of combating hydrochloric acid corrosion of equipment, vapour lines, condensers, etc.

(a) *Conventional Treating Methods.*

Sulphur Dioxide.

Apart from its use in liquid sulphur-dioxide refining plants, this gas is probably the most prevalent in refining practice, due to the universal use of sulphuric acid as a refining agent. The most common sources are sulphuric-acid concentrators in refineries which have their own acid plants and the various types of sulphuric acid-treating units.

Sulphur dioxide is a strong irritant poison, being so irritating to the throat and eyes that it is impossible to breathe in an atmosphere containing injurious concentrations. Concentrations as low as 3–5 parts per million may be detected by the average person, and as little as 20 parts per million is sufficient to cause watering of the eyes and irritation of the throat. Even lower concentrations than this can be injurious to certain forms of plant life. The maximum safe concentration which may be inhaled for 1 hour is given as 400–500 parts per million.[10] There are very few cases of acute poisoning from sulphur dioxide, probably because dangerous quantities are practically irrespirable, as the irritation caused is too intense. A person exposed to a lethal quantity may live for some days, one case being recorded stating that a man who had been overcome by the gas returned to work, but later was seized with repeated chills and died 20 days after exposure.[21]

In the case of acid concentrators, sulphur dioxide escapes normally in only very small quantities, and the liberation of large quantities will be rare, and will then be associated with sulphur trioxide. If the acid plant is situated in a populous district, it will undoubtedly be equipped with a completely closed system, so that, except for the possibility of a failure of some part of the equipment, no serious leakage will occur. Similarly, in liquid sulphur-dioxide refining processes, the practicability of its use in this manner and the economics of the process demand an absolutely closed system, to prevent even the smallest detectable loss of gas to the atmosphere.

In the use of sulphuric acid for the treatment of gasolines, etc., these treatments are nowadays almost exclusively carried out in closed systems, whilst in the treatment of heavier distillates such as lubricating oils the amount of sulphur dioxide released during the process is comparatively small.

A source of sulphur dioxide in all refineries is sulphuric-acid sludge formed

by the treatment of oils with this acid. The disposal of such sludge is an all-prevailing problem in most areas. Three general methods are available :

1. The sludge, after separation of entrained oil, is burnt in a special sludge disposal furnace.

2. The sludge may be separated into weak acid and tar, and the tar may then be used as fuel in certain sections of the plant—*e.g.*, steam boilers, equipped with special burners and atomizing equipment. The weak acid can be concentrated or run to the main effluent, provided close control is maintained on this to keep it slightly alkaline at all times, and so avoid generation of hydrogen sulphide from other waste products.

3. The sludge may be decomposed by heat into sulphur dioxide, oil and coke. The latter two products can be burnt and the sulphur dioxide converted into sulphuric acid in a contact plant. This latter process is generally used in refineries already equipped with their own acid plant.

The largest quantity of sulphur dioxide released in a refinery is usually from the combustion of fuel under the stills and boilers. The concentration in the flue gas is, however, very low, and the diffusion in the atmosphere so rapid that it is not objectionable under normal conditions.

Chlorine.

Chlorine gas is used in the petroleum industry as a means of preparing either sodium or calcium hypochlorite solutions, which are now somewhat extensively used for the sweetening of light distillates, and also for the treatment of natural gasoline. These solutions are generally and most conveniently prepared by passing either gaseous or liquid chlorine into a solution of either caustic soda or a slurry of lime. It is important that the temperature be kept as low as possible, as at temperatures over 120° F. there is a possibility of the reaction getting out of control, in which case the temperature rises rapidly and chlorine is evolved immediately.

TABLE IV.

Properties of Odorous and Obnoxious Gases.[10, 17]

Gas.	Molecular weight.	Density air = 1.	Lowest detectable concentration, P.P.M.	Boiling point, ° C.	Coefficient of diffusion in air.	Physiological effect.
Acetone	58·05	2·00	1·60	57	—	Anæsthetic.
Benzene	78·05	2·70	1·50	80	0·077	Toxic, Anæsthetic.
Cresol	108·06	3·73	0·19	191	—	Poison.
Ethyl ether	74·08	2·56	0·23	35	0·078	Anæsthetic.
Ethyl sulphide	90·14	3·11	56×10^{-6}	91	—	Nauseating.
Hydrogen sulphide	34·08	1·18	1	−10	—	Irritant poison.
Phenol	94·05	3·24	0·29	183	—	Poison.
Sulphur dioxide	64·07	2·21	3	−60	—	Irritant.
Sulphur trioxide	80·06	2·75	—	45	—	Irritant.
Toluene	92·06	3·18	0·48	111	0·071	Toxic, Anæsthetic.
Xylene	106·08	3·66	0·17	142	0·062	Toxic, Anæsthetic.

TABLE V.[10]

Toxic Properties of Gases.
(Concentrations in parts per million.)

Gas.	Lowest detectable odour.	Slight symptoms 3–5 hrs. exposure.	Max. safe to inhale for 1 hr.	Dangerous in 30 mins. to 1 hr.	Fatal 10 mins to 1 hr.	Physiological effect.
Ammonia	53	100	300–500	2500–4500	5000–10,000	Irritant.
Benzene homologues . .	1·5	1570–3130	3130–4700	—	19,000	Toxic, Anæsthetic.
Carbon disulphide . . .	—	322–386	483–807	1150	—	Poison.
Carbon monoxide . . .	—	100	400–500	1500–2000	4000	Asphyxiant.
Carbon tetrachloride . .	—	1600	4000–6000	24,000–32,000	48,000–63,000	Toxic, Anæsthetic.
Chloroform	—	200	5000–6000	14,000	25,000	Toxic, Anæsthetic.
Gasoline	300	1400–2800	4300–7100	11,000–22,000	24,300	Anæsthetic irritant.
Hydrogen chloride . . .	—	10	50	1000–2000	—	Irritant.
Hydrogen cyanide . . .	—	20–40	50–60	120–150	3000	Asphyxiant.
Hydrogen sulphide . . .	1	100–150	200–300	500–700	1000–3000	Irritant poison.
Phosgene	5·6	1	—	25	25–30	Irritant poison.
Sulphur dioxide . . .	3·5	20–30	50–200	400–500	—	Irritant.

TABLE VI.

Toxicity of Gases and Vapours.

(In milligrams per litre.)

	Allowable concentrations in air.*			Effect of poisonous gases on the individual.[9]		
	1.	2.	3.	Borne for 6 hrs. without serious effects.	½ to 1 hr. causes immediate or subsequent death.	Immediate death.
Carbon monoxide	0·01	0·01–0·02	0·02	0·01	2·0–3·0	—
Ammonia	0·01	0·02	0·03	0·06	1·5–2·7	—
Chlorine	0·002	0·001–0·002	0·002	0·003–0·005	0·1–0·15	2·5
Sulphur dioxide	0·01	0·02–0·04	0·02–0·04	0·06–0·10	1·4–1·7	—
Hydrogen sulphide	0·003	0·014	0·015	0·12–0·18	0·6–0·84	1·2–2·8
Benzol	0·1	0·05–0·1	0·2	5–10	20–30	—
Nitrobenzene	—	—	—	0·3–0·5	—	—
Acetone	0·5	—	—	—	—	—
Hydrochloric acid	—	—	—	0·013	1·8–2·6	—

* Authority.—1. Leningrad Institute of Safety Hygiene and Technique.
2. U.S.S.R. Scientific Institute of Labour Protection.
3. Soviet Industrial Standards.
[18]

Chlorine is an intensely irritating gas which attacks the membrane of the throat, lungs and nose. If a little be breathed for some time, it causes an irritating cough attended by the spitting of bloody mucus. Large quantities of the gas are fatal. According to Lehmann, Hesse and Zangar,[9] a concentration of 0·003–0·005 mgm. per litre may be borne for 6 hours without serious symptoms, whilst a concentration of 0·1–0·15 mgm. per litre after $\frac{1}{2}$–1 hour exposure causes immediate or subsequent death. Concentration of 2·5 mgms. per litre or over cause immediate death.

Ammonia.

Ammonia gas is very widely used in refrigerating machinery in refineries with either conventional wax plants or solvent dewaxing plants; both the compression and absorption systems are in common use.

Ammonia gas is also extensively used for combating corrosion in the vapour lines, etc., of distillation units, which occurs due to the formation of hydrochloric acid from magnesium chlorides contained in the crude oil. As ammonia gas for the above purposes is invariably confined in a closed system, danger can arise only from some mechanical failure of the equipment.

Ammonia is an irritant gas with an intensely pungent odour. If inhaled suddenly, it will bring tears to the eyes, and in large quantities will cause suffocation. It can quickly be detected by its characteristic smell, the lowest detectable odour concentration being 53 parts per million. The maximum concentration in air which can be safely inhaled for 1 hour is stated to be 300–500 parts per million [10]; and a concentration of 5000–10,000 parts per million is fatal in 10 minutes to 1 hour. It causes acute inflammation of the respiratory organs, cough, edema of the lungs, chronic bronchial catarrh and redness of the eyes.

Certain mixtures of ammonia in air are explosive, the lower and upper explosion limits being 16 vol. per cent. and 27 vol. per cent., respectively. It should also be noted that the so-called " foul " gases, occurring in refrigeration systems, particularly absorption machines, may contain explosive mixtures of air and ammonia with some hydrogen. Cutting and welding operations should not be allowed on such apparatus until it has been thoroughly drained of ammoniacal liquor and has been filled with water to dissolve or displace all gases.

Canister gas masks can be used to give adequate protection against ammonia gas. A wet cloth placed over the mouth and nose gives a fair measure of protection for a short time in the event of emergency, provided the concentration of the gas is not sufficient to affect the eyes.

Organic Sulphur Compounds.

Certain poisonous gases and vapours may also be encountered in connection with sludges and waste caustic solutions from the treatment of gasolines and light distillates, particularly cracked gasolines. These gases are mainly organic sulphur compounds, such as mercaptans, sulphides and disulphides, nitrogen compounds and phenolic compounds. These substances are better known for their intensely disagreeable, nauseating odours than as poisons, and are generally encountered in concentrations

too low to be toxic; they are detectable in extremely small concentrations, see Table VII.

TABLE VII.

Properties of Hydrocarbon Sulphides and Mercaptans.[19]

	Molecular weight.	Density Air = 1.	Lowest detectable concentration, P.P.M.	Boiling point, ° C.	Physiological effect.
Amyl sulphide . .	174·23	6·01	0·2	216	Nauseating.
Butyl mercaptan . .	90·14	3·11	6·0	98	,,
Ethyl mercaptan . .	62·11	2·14	18·0	36	,,
Ethyl sulphide . .	90·14	3·11	3·0	92	,,
*iso*Butyl mercaptan .	90·14	3·11	3·5	88	,,
Propyl mercaptan . .	76·13	2·62	2·0	67	,,

(3) SOLVENT-EXTRACTION PROCESSES.

In recent years solvent-extraction processes for the refining of lubricating oils have brought into common use in the petroleum industry such substances as furfural, sulphur dioxide, phenol, benzol, acetone, nitrobenzene, chlorex and other solvents. Although these substances are all liquids at normal temperatures, temperature conditions generally existent in the recovery side of such processes may result in vapour concentrations that are dangerous. Normally, however, all such solvent-extraction processes are operated in completely closed systems, and every effort is made to reduce any leakage or escape of solvent to the absolute minimum, as the economic value of the process largely depends on the overall loss of solvent being exceedingly low. In practice, therefore, dangerous quantities of gas or vapour are only likely to be encountered due to some mechanical failure of the plant and, as with distillation equipment, the chief safeguard against such occurrences lies in sound engineering design and construction, combined with periodic careful inspection and proper maintenance.

The more commonly used solvents in solvent refining and solvent-extraction process are as follows :—

1. Sulphur dioxide, either as a single solvent or in combination with benzene in the sulphur dioxide–benzol process.
2. Furfural.
3. Phenol.
4. Chlorex (ββ′-dichlorethyl ether).
5. Nitro-benzene.
6. Benzol (and toluol).
7. Acetone and methyl ethyl ketone.
8. Cresol.
9. Propane.

Other less commonly used solvents include trichlorethylene, aniline, acrolein (acrylic aldehyde) and crotonaldehyde. Of these solvents the physiological and toxic properties of sulphur dioxide have already been discussed.

As an indication of the extent of the use of the various solvents, it may be mentioned that the percentage of the various installations throughout the world which each process represents, is estimated to be as follows [12]:—

Solvent extraction plants.	Percentage of world's capacity (approx.).
Furfural process	32
Duo-Sol process (cresol propane)	23
Phenol process	18
SO_2-benzol process	15
Chlorex process	8·6
Nitro-benzene process	3·8
Solvent Dewaxing Plants.	
Benzol-ketone process	63
Propane process	24
SO_2-benzol process	5·7

Furfural, $C_4H_3O{\cdot}CHO$.

Furfural is an aldehyde having an amber colour and an odour similar to that of oil of bitter almonds. It has a flash point of approximately 138° F., a boiling range of 158–162° C. and is only slightly toxic. Exposure to furfural vapours in substantial amounts may cause headaches to those not accustomed to the material. Watering of the eyes also occurs, but these conditions are temporary, and disappear when the affected person leaves the furfural-containing atmosphere.

The work of Gardner,[13] in which rabbits were exposed to furfural vapours in closely confined quarters over long periods of time, indicates that furfural has some pathological effects on the animals, but the effects were not marked enough to produce death. This author classifies the physiological effect of furfural vapour as extremely mild—about the same order of magnitude as butyl alcohol. Years of practical experience of users and manufacturers of furfural have demonstrated that under normal plant conditions it is not hazardous to the health of workers. In rare cases individuals will be found who exhibit a skin sensitivity towards furfural, but this is not serious. However, it is sometimes recommended that patch tests be performed on all men who are going to be in intimate contact with substantial quantities of the material.

As regards the explosive limits of furfural in air, Jones and Klick[14] give a lower limit of 2·1 per cent. at 125° C., but no upper limit. Unpublished data indicate that the lower and upper limits are 1·5 and 9·7 per cent., respectively, when determined for upward propagation in a closed tube 2·1 cm. in diameter and 30 cm. long. The vapour pressure of furfural is such that the lower limit corresponds to saturated vapour at a temperature of 49° C. and the upper limit to the vapour pressure at a temperature of 92° C. However, as it is never certain in practice that the air is fully saturated with vapour, even though liquid furfural may be present, it must be considered that explosive mixtures may exist at any temperature above 48° C. For the same reason, when any detection apparatus is used, the atmosphere passing into it, if above 48° C., should not be allowed to cool below that temperature, because the furfural might then condense,

leaving an atmosphere which would be recorded as non-explosive when in fact it might have been explosive.

Furfural vapour in air may readily be detected by exposing strips of paper, previously treated with a mixture of equal parts of aniline and acetic acid (80 per cent.). In the presence of furfural, the paper will turn red.

Phenol, C_6H_5OH.

Phenol, commonly known as carbolic acid, is a white, crystalline solid having a distinctive aromatic odour. It melts at 42° C. and has a boiling point of 183° C. It is not volatile enough at ordinary temperatures to give off vapours in sufficient quantity to cause poisoning by inhalation; but, even so, it is a powerful corrosive contact poison which may be absorbed rapidly even through unbroken skin. Any phenol splashing on to the skin should be washed away immediately with alcohol. A small quantity saturating the clothing is dangerous, and such clothing should be immediately removed and the part of the skin contacted washed with alcohol.

Symptoms of phenol poisoning appear with remarkable suddenness. The victim may first feel a headache, followed by dizziness, delirium, excitement, great muscular weakness, the loss of consciousness and death from respiratory failure. The fatal dose is considered to be 8–15 grams, but much smaller quantities may cause death when introduced into the body through the skin or membranes.[22] The lowest detectable amount of phenol vapour in the air is stated to be 0·29 part per million.[10]

Chlorex (ββ′-*Dichlorethyl Ether*, $C_2H_4Cl{\cdot}O{\cdot}C_2H_4Cl$).

Chlorex is the trade name for ββ′-dichlorethyl ether. It is a colourless liquid insoluble in water, but soluble in most organic solvents. It has a boiling point of 178° C. and a flash point of 168° F. Its odour is pungent, and it is very irritating to the eyes and mucous membranes.

According to Schrenk, Patty and Yant,[23] who carried out experiments with guinea-pigs, dichlorethyl ether is an intense irritant to the respiratory passages and lungs, causing congestion, edema and hæmorrhage of the lung. It was not possible at room temperature to attain a concentration which would kill in a short time, but exposure to 1000 parts per million for 30–60 minutes was dangerous. A concentration of 35 parts per million was the maximum amount which could be experienced for several hours without serious disturbance.

The same observers state that concentrations of 550–1000 parts per million of the vapour in air were found, in brief exposure of men, to be very irritating to the eyes and nasal passages. Lachrymation was profuse and the atmosphere was considered to be intolerable. A concentration of 35 parts per million had an easily noticeable odour, which was only slightly offensive and practically free from irritation.

Nitrobenzene, $C_6H_5NO_2$.

Nitrobenzene, commonly called oil of mirbane, is a yellow oily liquid with a pronounced odour of bitter almonds. It has a melting point of 5·7° C., a boiling point of 211° C. and a flash point of 208° F.

It is a powerful narcotic poison which may enter the body through the skin if spilled on the skin or clothing. It is considerably toxic and according

to Lehmann, Hesse and Zanger,[9] the maximum concentration in air which can be borne for 6 hours without serious symptoms is 0·3–0·5 mgm. per litre. Breathing of large quantities of the vapour may produce sudden nausea, vomiting and an unsteady gait followed by stupor, coma finally appearing and death resulting from respiratory failure. The symptoms are very similar to those of alcoholic intoxication. The face becomes pale to dark grey in colour and the body temperature falls.

According to Francis,[24] the fatal dose is 1 gm.; death usually takes place within 24 hours, but may be delayed for several days. On the other hand, Ferris [15] states that nitrobenzene has obtained an unfortunate reputation in respect to its toxicity which is not warranted. He states that neither makers nor users of this material have found reason to be particularly concerned about its toxicity. In some nine years of laboratory, semi-plant and full-scale operation with nitrobenzene as a selective solvent, he claims that not a single case of serious poisoning has been encountered. He further suggests that it is dinitrobenzene which causes most of the difficulties, and that although several commercial grades of nitrobenzene contain a good percentage of this material, the grade used for extraction purposes must be and is, kept free of dinitrobenzene. Being entirely stable towards air, and having a high flash point, no storing precautions such as inert gas blanketing are required.

Cresol (para-*Cresol*, *Cresylic Acid*, $CH_3 \cdot C_6H_4 \cdot OH$).

There are three cresols, *ortho-*, *meta-* and *para*; it is the *para* form used under the name of cresylic acid which is used as the selective solvent in the Duo-Sol process. The solvent actually used is not pure cresylic acid, but a blend of phenol and cresylic acid, one of the commonest used blends being known as No. 2 Acid, generally called "Selecto." Its composition is 35 per cent. phenol and 65 per cent. cresol. *para*-Cresol has a melting point of 93° F. and a boiling point of 396° F.

The poisoning properties and symptoms of cresol poisoning are similar to those of phenol, and the same precautions in handling should be observed. The lowest detectable concentration of cresol vapour in air is stated to be 0·19 part per million.[10]

Benzol (*Benzene*, C_6H_6).
Acetone (*Dimethyl ketone*, CH_3COCH_3).
Butanone (*Methyl ethyl ketone*, $CH_3COC_2H_5$).

The benzol–ketone dewaxing process employs a mixture of three commercial grade solvents: (*a*) acetone or methyl ethyl ketone, (*b*) benzol and (*c*) toluol. In many cases the latter is dispensed with and commercial 90's benzol used. The actual composition of the solvent blend used varies according to the particular oil treated, but normally a mixture varying between 40–50 vol. per cent. of acetone or M.E.K. and 60–50 vol. per cent. of 90's benzol meets most requirements. Such a mixture is both toxic and anæsthetic, and, of course, represents a considerable fire and explosion hazard, unless the necessary precautions are taken both in the design and construction of the plant and auxiliaries, and in the operation of the process.

The recovery of the solvent from the dewaxed oil and from the separated wax is accomplished in specially designed evaporators and fractionating

towers, by the use of steam alone, both low-pressure exhaust steam and high-pressure steam (400 lb./sq. in.) being employed. The risks which would be present if direct-fired heaters were used is thereby eliminated.

As in other processes, sound engineering design and rigid maintenance are the best safeguard against the leakage or loss of solvent, and the fact that the majority of such plants operate year in and year out with a *maximum* overall loss of solvent of 0·05 per cent. on solvent turnover is ample evidence of the care taken to reduce this loss to a minimum.

In order to help towards this end all pump rods, chiller shafts, filter-trunnions and similar glands are oil-sealed to prevent loss of solvent. Similarly, all solvent storage tanks are blanketed by means of inert gas (CO_2), and this practice is adopted throughout the whole plant in any vessel or filter where solvent is present at low temperatures. This precaution is adopted in order to eliminate any risk of explosive mixtures being formed at the low operating temperatures used; normal chilling temperature of the dewax-mix is — 10° F. to — 20° F.

The use of tools other than non-sparking tools should be rigorously prohibited in all parts of the plant where solvent is present, and special fire permits should be obtained before any repair work is begun.

Benzol vapour is poisonous as well as being anæsthetic, the symptoms of benzene poisoning being: acute headache, vertigo, anæmia, muscular tremor, scarlet lips, spots of extravasated blood in the skin, irritant cough and fatty degeneration of the liver, kidneys and heart; blood symptoms are a low count of red and white corpuscles and low hæmoglobin. Cases of such poisoning are practically unknown in benzol–ketone dewaxing plants, and in the case of one plant in this country which has been operating continuously for the past two years not a single case has occurred.

For acetone and benzol (benzene), the lowest detectable concentration of the vapour in air is given as 1·6 and 1·5 parts per million, respectively [10]; no data are available in this respect for M.E.K. The maximum safe concentration of benzol vapour in air which may be inhaled for 1 hour is stated to be 3130–4700 parts per million; 19,000 parts per million is stated to be fatal in 10 minutes to 1 hour.[10]

There is no evidence that acetone is poisonous under plant conditions or ordinary usage. Men working for long periods in filling-rooms have neither given any evidence of poisoning nor appeared to have suffered any inconvenience from the inhalation of acetone vapours. It is anæsthetic, but large quantities are required to produce anæsthesia.

Methyl ethyl ketone is similar to acetone in its physiological action, a concentration of 20,000–25,000 parts per million of M.E.K. vapour in air is stated to be toxic.

The lower and upper explosion limits in air for these solvents are as follows:—

	Lower limit, per cent. by vol.	Upper limit, per cent. by vol.
Benzene [3]	1·4	8·0
Toluene [3]	1·3	7·0
Acetone [3]	2 or 3	13
Methyl ethyl ketone [16]	2	10

Propane, C_3H_8.

Liquid propane is used as the secondary solvent in the Duo-Sol process, and also in the propane deasphalting and dewaxing process. Although propane, boiling point — 42° F., is a gas at atmospheric conditions of temperature and pressure, it can be maintained in the liquid state under moderate pressures at ordinary temperatures.

Propane is one of the lightest hydrocarbons, and, as such, exhibits all the properties of a light hydrocarbon vapour described under distillation processes, and the usual precautions must be observed in plants where it is used as a solvent. As it is stored in vessels under pressure, blanketing with inert gas is unnecessary, but inert gas (CO_2) is generally used for flushing out vessels—*e.g.*, filters—before these vessels are opened up for inspection and for repair. The explosion limits of propane in air are 2·4 vol. and 9·5 vol per cent. respectively.

The remarks regarding safe practice in plants in which benzol–ketone mixtures are used apply even more forcibly to plants in which propane is used.

Trichlor (*Trichlorethylene*, C_2HCl_3).

Trichlorethylene is a colourless liquid with a boiling point of 188° F. It is non-inflammable, non-explosive and non-combustible, and may, in fact, be used as a fire extinguisher.

It was used extensively in Germany, during the war, as a solvent for fats. Four cases were reported by Plissner of men who had been exposed to the vapours from a half to one day.[26] The first symptoms were smarting of the eyes and burning of the skin, followed in a few hours by complete paralysis of the mouth, cheek and nose; this remained for eight months.

Experiments with animals indicate that trichlorethylene is less poisonous than carbon tetrachloride, but more poisonous than chloroform. High concentrations result in headache, dizziness, intoxication and anæsthesia. Death follows quickly after unconsciousness, unless the victim is removed to fresh air and free respiration quickly induced.

Henderson and Haggard [27] state that the toxicity of the chlorine derivatives of the hydrocarbons increases with the addition of each atom of chlorine, but diminishes slightly when the substitution is carried out to the complete replacement of hydrogen with chlorine. The hydrocarbon radicle also influences the toxicity; thus the chlorine derivatives of the paraffin series increase in toxicity in ascending the scale.

Acrolein (*acrylic aldehyde*, $CH_2{:}CH{\cdot}CHO$).
Crotonic aldehyde, $CH_3{\cdot}CH{:}CH{\cdot}CHO$.

Acrolein is a colourless liquid with an irritating odour, which on exposure to air is gradually oxidised to acrylic acid. The vapour of acrolein is heavy, irritating and toxic. It is exceedingly irritating to the mucous membranes, and the first symptoms, after inhalation, include dizziness, pressure in the head and stomach, distressing catarrh and pain. In low concentrations it affects primarily the respiratory tract, but in large quantities induces edema of the lungs. All severe cases end fatally.[28]

Crotonic aldehyde is also a colourless liquid with a pungent odour. Its physiological and toxic properties are similar to those of acrolein.

Aniline, $C_6H_5NH_2$.

Aniline is a colourless, oily, inflammable liquid which gradually becomes brown on exposure to air, and has a characteristic odour.

Like nitrobenzene, phenol, cresol, etc., it may be absorbed through the skin, and poisoning by this method may occur or by inhalation of the vapour. The first symptom of aniline poisoning is loss of colour, the pallor being followed by development of a blue colour on the finger-nails, lips and tongue. This stage is usually accompanied by slight headache, dizziness and a tendency to delirium.[29] It is also stated that in chronic poisoning the chief characteristic is anæmia, with slow pulse, disturbances of digestion, headache, dizziness, head noises and muscular pains.

Very few deaths occur from aniline poisoning, the exceptions being in cases of prolonged exposure to the fumes or where saturated clothing has been allowed to remain in contact with the skin for an unnecessarily long time. As with phenol, cresol and similar substances, clothing on which the material has been spilled should be removed without delay. One-tenth to one-fourth of a gm. has produced serious symptoms, and death has been caused by quantities varying from 25 to 100 ml. The lowest detectable concentration of the vapour in air is stated to be 0·23 part per million.[10]

TABLE VIII.

Physical Properties of Solvents Used in Solvent-Refining Processes.[12, 28]

	Sp. gr.	Boiling point, ° F.	Molecular weight.	Solubility at 100° F., per cent. by weight.	
				Solvent in water.	Water in solvent.
Acetone	0·792	133	58·1	—	—
Acrolein	0·839	126	56·0	—	—
Aniline	1·022	364	93·1	3·8	5·8
Benzene	0·878	176	78·1	0·16	0·11
Carbon tetrachloride	1·584	170	153·8	0·09	0·01
Chlorex	1·222	353	143·0	1·2	1·1
o-Cresol	1·051	375	108·1	3·0	14·5
m-Cresol	1·039	396	108·1	2·5	14·5
p-Cresol	1·039	396	108·1	2·2	16·5
Crotonaldehyde	0·859	219	70·0	—	—
Ethylene dichloride	1·257	182	99·0	0·9	—
Furfural	1·162	323	96·0	9·0	6·5
Methyl ethyl ketone	0·805	175	72·1	19·0	10·2
Nitrobenzene	1·207	412	123·5	0·3	0·35
Phenol	1·072	359	94·5	9·4	32·5
Propane	0·511	−48	44·1	3·4	—
Sulphur dioxide	1·45	14	64·1	—	—
Toluene	0·866	231	92·1	0·05	—
Trichlorethylene	1·450	188	131·4	0·16	0·05

References.

[1] U.S. Bureau of Mines Technical Paper No. 272.
[2] Haggard, *J. Pharmacol. and Exp. Therapeut.*, Dec. 1920, **16**.
[3] Coward and Jones, "Limits of Inflammability of Gases and Vapours," U.S. Bureau of Mines Bulletin, 1931, No. 279, 91.
[4] "Fire Protection in Refineries," A.P.I. Bulletin (Division of Refining), 1931.
[5] Burrell and Gauger, "Limits of Complete Inflammability of Mixtures of Mine Gases and of Industrial Gases with Air," Tech. Paper 150, U.S. Bureau of Mines, 1917, 5–7.
[6] Jones and Yant, U.S. Bureau of Mines, Tech. Paper No. 352.
[7] Burrell, "Description of a Portable Gas Detector," *Ind. Eng. Chem.*, 1916, **8**, 365–366.
[8] Yant, W. P., "Hydrogen Sulphide in Industry; Occurrence, Effects and Treatment," *Amer. J. Public Health*, 1930, **20**, 603.
[9] Lehmann, Hesse and Zanger, "Schadliche Gase," Flury-Zernile, 1931, 452.
[10] Fieldner, Katz and Kinney, U.S. Bureau of Mines, Tech. Paper No. 248.
[11] Birch, "Science of Petroleum," III, 1732.
[12] Smoley, Schutte, and Davis, *The Refiner*, 1938, **17**, 535.
[13] Gardner, U.S. Paint Manuf. Assoc., Circular No. 250, Oct. 1925.
[14] Jones and Klick, *Ind. Eng. Chem.*, 1929, **21**, 791.
[15] Ferris, S. W., "Science of Petroleum," III, 1904.
[16] Langedijk, *Chem. and Ind.*, **57**, 891–898.
[17] International critical tables.
[18] A. S. Zhilkova, "Some Methods for the Detection and Estimation of Poisonous Gases and Vapours in Air," Moscow, U.S.S.R., 1936.
[19] U.S. Bureau of Mines, Tech. Paper No. 267.
[20] Jones, Yant, and Berger, "The Explosibility of Hydrogen Sulphide in Air," *Ind. Eng. Chem.*, 1924, **16**, 353–355.
[21] C. K. Francis, *Oil Gas J.*, 1936, **34**, No. 39, 45.
[22] *Ibid.*, No. 34, 41.
[23] Schrenk, Patty, and Yant, U.S. Public Health Reports, 1933, **48**, 1389.
[24] C. K. Francis, *Oil Gas J.*, 1936, **34**, No. 37, 71.
[25] *Ibid.*, No. 41, 47.
[26] *Ibid.*, No. 43, 56.
[27] Henderson and Haggard, "Noxious Gases," 158–159.
[28] C. K. Francis, *Oil Gas J.*, 1936, **34**, No. 42, 54.
[29] *Ibid.*, No. 40, 47.

PROTECTION AGAINST DANGEROUS GASES IN THE OPERATION OF CRACKING UNITS.

By E. J. M. Tait.*

Inherent in all cracking operations is the evolution of gases and vapours. Practically all of them are inflammable. Some are poisonous and all are asphyxiating.

Thus three hazards are created :—

(1) The fire hazard.
(2) The hazard of poisoning.
(3) The hazard of injury through falling, due to loss of consciousness from breathing hydrocarbon vapour.

Of the toxic gases, hydrogen sulphide is the most dangerous, as it is an insidious poison. It is particularly prevalent in connection with cracking operations which cause thermal decomposition of sulphur compounds often present in charging stocks, and is released from the system with the distillate to the run-down tanks.

A system of washing the distillate leaving the receiver with water and caustic soda is suggested as a method of removing the hydrogen sulphide from the distillate before it reaches the run-down tank.

Hydrogen sulphide is by no means the only dangerous gas to be guarded against in the operation of a cracking unit. In fact, it is undoubtedly blamed for many accidents and injuries attributable to hydrocarbon gases.

The light hydrocarbon gases have anæsthetic action, and if breathed by a man in considerable concentration, they result in semi-asphyxiation, which frequently causes men to fall off tanks or suffer injuries in other ways.

There are so many different ways in which accidents may occur due to the presence of gases around a cracking plant, that it is proposed to deal with the subject under separate headings, together with suggested precautions which should be taken.

Gas-Masks.

Where hydrogen sulphide is present in the distillate, all tank gaugers should be made to wear gas-masks, although this is not always insisted on in all refineries. In some refineries in the United States any crude containing 0·05 per cent. of hydrogen sulphide is classed as dangerous, and the wearing of gas-masks by tank-gaugers is enforced.

There are two types of gas-mask generally in use in refineries—namely, the canister type and the fresh-air type.

The fresh-air type is used by men carrying out repairs or cleaning tanks where there is not enough oxygen and where a dangerous gas exists; this type of mask takes air suction through a length of hose, which extends outside the tank or vessel to where pure unpolluted air is available.

The canister mask is used in cases where the fresh-air type is not needed, such as in tank gauging, etc., where dangerous gases exist, but not to such

* Dr. V. Henny, Representative, Universal Oil Products of Chicago.

a great extent. The canister type of mask protects the wearer in such a way that he can breathe only through the canister which contains chemicals which absorb the dangerous gases and allow only pure air to pass through the corrugated tube to the face piece. For protection against hydrogen sulphide, the canister is usually filled with soda lime, which absorbs the hydrogen sulphide. Canisters are also obtainable filled with activated charcoal to give protection against petroleum vapours.

Where gas-masks, whether of the canister type or fresh-air type, are used, they must be maintained in perfect condition. The normal life of a canister is about 2 hours continuous use, and about 12 to 13 hours intermittent use. In order to check up and keep an accurate record of the life of the canister, a card should be attached to it, the card to be marked out in spaces equal to 5 minutes. Each time the mask is used the time is noted on the card, and when 12 or 13 hours are noted, the canister should be replaced. Should there be at any time, however, an odour of gas from the canister, it should immediately be changed. It should similarly be replaced irrespective of service if it is one year old. Face pieces, corrugated hoses and connections should be regularly checked over to see they are in good condition.

Should any man be overcome or collapse as a result of being gassed, he should be immediately removed from the gaseous area, and it should be remembered that the rescuer, or would-be rescuer, should first stop to put on a gas-mask and see that it is properly adjusted before entering the affected area, otherwise he is liable to become a casualty himself. The Schaeffer Prone method of artificial respiration should then be used until medical attention is obtained.

It is necessary to see that the rule regarding the wearing of gas-masks is strictly enforced, as, if this is not done, it will be found that after some time the men will have decided that they do not really need a mask, and will, if they can, leave them off.

Tank-gaugers should also be provided with rope-soled shoes, so that there is no danger of a spark from nailed boots striking the roof of the tank and igniting any gases escaping from the manhole.

Drawing Samples.

Great care should be taken at all times in the drawing of samples, more especially distillate samples, as, should the man bend down with his head close to the sample-valve, it is quite easy for him to be gassed. For this reason, and also from the fire-protection point of view, the sample-valve should have a line at least 2 ft. 6 ins. long after it leading to the sample bottle. In this way the operator is not close enough to receive any ill effect from the gases.

While on the subject of sample drawing, it might be of interest to mention a recent occurrence, which, although not coming strictly under the heading of gases, is sufficiently near to be worth including from a safety point of view. An operator was drawing a sample of light distillate from a sample connection, and suddenly, without any warning, the distillate flashed, the man dropped the sample can, the contents of which spilled over the floor, fed the flames, and as the sample valve was surrounded by flames and could

not be closed, a serious fire ensued, necessitating the shutting down of the plant. At the subsequent investigation it was decided that the fire was due to static electricity, and it was recommended that when drawing samples the can should be grounded to the draw-off pipe and drain.

Pump-Houses.

It is important to see that all vents from light oil or distillate pumps, and from pressure gauges on these pumps, are not allowed to discharge into the atmosphere, whether the pumps are situated in the open air or in an enclosed pump-house, but that they are led to a closed drain. An escape of vapours to the atmosphere is most serious in a pump-house where a man can easily be gassed, and all vents from pumps should therefore be led, if not to a closed drain, at least to a drain outside the building.

While on the subject of pumps, it is worth mentioning that all packing in distillate, reflux pumps, etc., should be maintained in good condition and continually replaced as required. If this is not done, and glands are allowed to leak, particularly in the case of a unit processing high sulphur stocks, the gases will make the atmosphere in the control-room almost unbearable, more especially in a warm climate, and while ventilators will help to clear the atmosphere, it is impossible to keep it completely gas free.

All lamps and fittings in the control-room and receiver-house should be of vapour-proof manufacture, and no electric bells, telephones or other spark-producing equipment should be installed inside these buildings. The windows on the control panel between the control-house and receiver-house should be of wire glass set in fixed sashes, and no larger than necessary for the control man to make his observations, so that the two buildings are entirely separate.

Trenches, Sumps, etc.

It should be arranged that all sumps and pits are trapped so that vapours cannot come back to the unit.

Nowadays the tendency is to do away with trenches to a great extent, and arrange as many as possible of the process lines overhead. However, there are many cracking units in operation with complicated trench systems, and these, if not continually inspected and kept clean, are likely to cause much trouble. Slight leaks from sample coolers or adjacent sewer-pits allow vapours to collect in trenches, and, coming into contact with a hot line, cause an explosion, which has been known to result in a serious fire. It is very difficult to impress upon the smaller refiner that all trenches must be kept clean, as so many of them, in spite of all evidence to the contrary, hold the view that cleaning up is a needless expense.

Trenches should also have effective fire-walls in order to prevent any leaking gases and vapours from making their way to the furnace and igniting. Probably the best type of fire wall is that found in some cracking units on the Continent. These consist of two plates kept in position by bolts and spacers, and filled with sand packed down tight. They have the advantage of easy removal when necessary.

The operating crews should be trained from the outset to see that all trenches, pits, etc., where inflammable gases can collect are kept scrupulously

clean, and the incoming shift should be made to see that this is so before taking over.

Pressure Relief, Drop-out and Drain Lines.

All safety-valves should lead through pressure relief lines to the pressure relief header, and thence to the main drop-out sump. It should enter the sump below the water-level, so that there is no danger of the hot gases coming into contact with the atmosphere, and perhaps igniting. All lines from safety and drop-out valves should be inspected frequently to make sure that they are not leaking anywhere, particularly at the flanges due to expansion. However, the special expansion bends provided will generally take care of this.

All cracking units should have check-valves on every drop-out and drain-line from all vessels, and more particularly from the furnace drop-out. However, it is better, after the furnace or furnaces have been steamed out, to close the main drop-out valve and instal a blank flange, so that gases cannot work back along the line to the furnace. On one occasion this happened, and several men who were tube cleaning were badly burned.

It appears rather " far-fetched " to imagine that petroleum vapours can travel back to a unit up through drop-out lines, but, as instanced above, this does happen, and it can be explained by the fact that for quite a while after a unit is shut down there is an updraft in and about the furnace, and this acts as a pull through open lines connected thereto or in close proximity.

All check-valves installed in drop-out and drain lines should be periodically opened up, cleaned and inspected. It is not usually necessary to remove the valve, but only the top cover. It will sometimes be found that the valve, especially if on a line passing heavy material, is stuck in the open position; however, all should be checked over at regular intervals, and the fact recorded for future reference.

Opening up Vessels for Clean-out and Repairs.

Applicable to all cracking systems are certain precautions to guard against ignition of hydrocarbon vapour–air mixtures, and these are particularly important in the case of vessels.

These precautions are aimed to prevent the combination of circumstances that cause fires, and three things are to be avoided :—

(1) Mixture of vapour/air in an inflammable proportion.

(2) Contact of an inflammable vapour/air mixture with a flame or spark.

(3) Heating of vapour/air mixture to a temperature that will cause self-ignition.

In laying safeguards against the ignition of explosive air/vapour mixtures, they should be considered with respect to their presence

(1) In the system at the start of operation;

(2) In the system during shut-down, or while repairs, inspection or clean-out are taking place.

At the start of the run, the danger of air/vapour mixtures lies firstly in spontaneous or self-ignition as operating temperatures are raised, and

secondly their contact with glowing iron sulphide (rapid oxidation or pyrogenetic action), which in this instance provides the source of ignition.

The obvious precaution to be taken, then, is the expulsion of the air to avoid the presence of air/vapour mixtures, and this may be done in several ways :—

(1) Displacement by cold liquid.
(2) Displacement by liquid which at the same time is being heated.
(3) Displacement by vapours evolved by the oil as it is being charged to the system.
(4) Displacement by vapour or gas introduced from an extraneous source.

Displacement by cold liquid is recommended as being the safest and most fool-proof. The others involve vapour/air mixtures which might be ignited by oxidation of iron sulphide, unless of course an inert gas is used.

In any event, the system during the shut-down should have been previously ventilated with air, so that iron-sulphide oxidation could have taken place before charging. Iron sulphide in dead pockets in the presence of hydrocarbon vapours would remain inactive until charging is started, when air is moved through the system, and into those areas in which vapour is also present; oxidation might then take place with resulting ignition of the air/vapour mixture.

Unless air/vapour mixture is removed from the system after it has been shut down for clean-out and repair, workmen who enter are in danger from possible ignition of the mixture by sparks, flames from welding torches, breaking electric-light bulbs and short circuits, in addition to the toxic effect mentioned previously. Although the system may have been effectively emptied of vapours, there always remains the possibility of subsequent entrance of vapours through connections past valves intended to prevent it or by misoperation. The only safe procedure is to break all connections through which oil vapours or gas might enter the unit. This includes raw oil lines, distillate or other reflux lines, final product lines and incondensible gas connections. As a further precaution, when men are employed in vessels, all pipe connections thereto which normally carry oil or vapours to or from that vessel should be disconnected or blanked off.

Extension cords for portable electric light which are indispensable for repair and inspection work are exposed to serious wear, and often abuse. Provided they are made from the proper materials, are properly assembled and regularly inspected, they are safe for use in atmospheres that may contain inflammable vapours. Extension cords should be made up of extra heavy metal shell plugs, extra heavy, reinforced, rubber-covered flexible cable, keyless metal sockets, vapour-proof globe and substantial non-abrasive metal guard, with hook and wood handle.

In assembling this equipment the ends of the flexible cord should be soldered, then fastened under the terminal screws in the socket and plug and then soldered to the terminal. Inside the socket and plug the cord should be knotted or taped, so as to avoid any strain on the terminal. In addition, the attachment plug and the socket or guard should be equipped with a clamp or other mechanical means for taking mechanical strains off the terminals.

Vessels such as fractionating columns, stripping columns, etc., which have bubble trays, pans and other internal equipment, are much more difficult to free from gas than vessels such as reaction chambers which have no internal equipment. This is because the trays and pans cause gas pockets, and though one section of the column may be entirely gas-free, others will sometimes be found containing sufficient gas to cause an explosion.

An instance of this occurred recently in the fractionating column of a cracking unit, although gas samples taken before opening up showed negative. In this case, though, it is not known from which part of the column the samples were taken. The column was steamed and watered in the usual manner when shutting down, and blanks were placed in all the principal connections. After the vessel had been filled with water, draining was started, and during the draining period, when the vessel was nearly empty, it was noted that there was a vacuum for a short while on the vessel as the water stopped flowing for a short period and then recommenced. After the vessel had been completely drained and opening of the manholes was started, it was noticed that blue smoke was emerging from around the joint of the top-side manhole cover, and this was smothered with a water hose. When all manholes had been removed, the tower was entered, and many of the pans and bubble trays were found to be broken in pieces, and some sections of the lower pans were found resting on the broken bubble trays several feet higher up the column (Figs. 1 and 2).

Although none of the operators recollected hearing it during the emptying period, it would seem that the explosion must have actually taken place just after the vacuum was noticed. The vacuum would draw in cold air from the vent in the top of the vessel, passing downwards until it came to a section where there still remained a thick layer of oil and the gas given off therefrom mixed with the incoming cold air formed an explosive mixture, which was ignited by the iron sulphides in the scale on the vessel wall. This was borne out by the fact that in the section of the column where the explosion seemed to have occurred, no scale was visible, whereas elsewhere it was plentiful. The explosion was evidently due to the fact that the column was not cleared of gases throughout before being opened up, and it would appear that the only way this could be overcome, in the future, would be to fit nozzles on the side of the column, arranged so that when the unit was shut down, jets of high-pressure water could be directed on each tray so as to remove all oil and deposit which is likely to give off gases.

A similar instance occurred in the fractionating column of another cracking unit, although this was not so serious, as only two trays were damaged. The force of the explosion, however, had been great enough to bend the H angle beam under the tray, 9 ins. out of line. Nothing was heard of any explosion, and it was only when the vessel was opened up for inspection that the damaged tray was found.

The following are some further instances where accidents could have been avoided by taking the usual precautions.

Recently while heading up the top man-way opening of a flash-chamber, two men were badly burned. A unit which normally makes runs of about 30 days or so had to be shut down, after a few days in operation because of premature plugging of a draw-off line. The entire unit was steamed in accordance with customary practice. Ordinarily the tower would also be

FIG. 1.
RESULT OF EXPLOSION IN FRACTIONATING COLUMN.

FIG. 2.
RESULT OF EXPLOSION IN FRACTIONATING COLUMN.

[*To face p.* 352.

water-washed, but in this instance it was not done because of the nature of the shut-down and the shortness of the run, combined with the feeling that the steaming operation was all that was necessary. Steam was, in addition, allowed to discharge into the tower while the draw-off line was being cleared. Vapours, however, apparently still existed in the tower and were being pulled to the flash-chamber, which, while open, created a stack effect on the vapour line entering this vessel from the tower. After the bottom door of the flash-chamber had been closed and the top was being closed, these vapours accumulated in the flash-chamber, and when a proper mixture with air was reached, they ignited, presumably due to iron sulphide.

On another occasion recently, uncondensable gas from one unit entered the other which was shut down at the time. In this installation the gas release from the two units entered a common header, and the gas thus passed from this header into the receiver of the shut-down unit through the condenser coils to the dephlegmator, and from dephlegmator to reaction chamber via the vapour line. An electric arc in the reaction chamber provided the ignition, and an explosion occurred.

During a pressure test on a condenser coil following repairs, distillate found its way through a recycle line to the tower, and the vapours therefrom to the flash-chamber vessel next in line. Ignition occurred probably by iron sulphide, and an explosion took place.

Now in all the above incidents simple precautions taken as a matter of routine would have prevented their happening. In the first instance no doubt the men were keen to get the plant into operation again, and thought they would save time by omitting the watering of the tower. In the latter two cases a few minutes spent in fitting a blank flange would probably have saved some lives.

Furnaces.

Great attention must always be paid to the handling of the furnace or furnaces, as this part of the equipment is the heart of the whole system, and while some of the vessels may be by-passed for a short time without causing a shut-down, this cannot be done in the case of the furnace, as operating conditions cannot be maintained for more than a few minutes without the necessary heat.

When lighting fires in a furnace which has been out of operation, it should first of all be purged of any gas which may have collected in pockets during the shut-down period. Steam should always be opened through the steam connections on the burners, and allowed to blow for 5 or 10 minutes through the combustion chamber and flues before fires are lighted, so that there is no danger of an explosion, and firemen should be trained to do this as part of their routine. This should be rigidly adhered to, whether the furnace is started up on oil- or gas-burners.

Similarly, because of the risk of explosion, as soon as a unit is shut down, all valves on the main gas header to the unit are closed and blank flanges fitted to the line. This prevents a possibly leaking valve passing gas from another unit or from the refinery gas-header. This should be made a routine job, in the same way as purging the furnace before lighting fires.

When the furnace tubes have been drained out, steam is then cut into the tubes and allowed to pass through the coil and drop out line to the sump,

while all the bolts holding the return bends are loosened; this, in the case of an average furnace, takes about 2 hours. Steam is then cut off, and one return bend eased off its seating; however, should there be any sign of vapour or gases, the return-bend must be replaced, and further steaming carried out until the tubes are vapour free, when the furnace is unheaded.

The main gas-header to the furnace from the cracking plant or gas plant, according to the refinery lay-out, should be frequently inspected, as, if high sulphur charging stock is used, it may be corroded. Sometimes gas lines are over-head—in fact in most of the new units this is so. However, in some cases these lines are buried. In this case the lines should be dug up and inspected at regular intervals, as they are occasionally found to be corroded on the exterior, and as a protection against this they should be wrapped with sacking or otherwise protected.

Corrosion.

Corrosion can be attributed to several factors, amongst which are high sulphur or high salt content in the charging stock and electrolysis of condensers and coolers.

The relationship of salt to corrosion has not been definitely established, as although it has increased the rate of HCl corrosion, due to the hydrolysis of magnesium and calcium chloride, in locations where this might normally be expected—that is, in the lower temperature sections—it has also increased the rate of corrosion at locations where H_2S corrosion is generally most active, in the high-temperature sections, about 370° C. and over. The most widely known cause of heavy corrosion, however, is hydrogen sulphide and free sulphide formed by the decomposition of sulphur compounds in the charging stock.

The injection of lime in varying quantities according to the sulphur content of the charging stock, but on the average about 0·75 lb. per barrel of intake, has proved successful in reducing the corrosion; however, the injection of lime has been known to raise the B.S. content of the residue, and from that point of view is not so good.

Cracking units which are designed to process high sulphur stocks are generally provided with alloy liners in the main pressure vessels and alloy process piping. As the cost of the corrosion-resisting materials is approximately 15 per cent. extra above the normal cost of the unit, it would be a great help to the refining industry if a process could be brought out which would prevent the formation of hydrogen sulphide when the oil is heated. It is true that since pretreating and soda-washing of the Irak crudes has been started there has been a decrease in corrosion, but it still remains a problem, and one which would seem to offer a very good opportunity for study.

It has been found on selective cracking units operating on high sulphur crudes that the greatest corrosion took place in the low-pressure side of the equipment, where the pressure was about 90 lbs. per sq. in., and the temperature 390–430° C. Sulphur corrosion is usually most active in this temperature range; it is very rarely serious below 370° C. or above 430° C. This temperature range certainly narrows down the corrosion area, but, all the same, it is necessary that a careful watch be kept on the equipment,

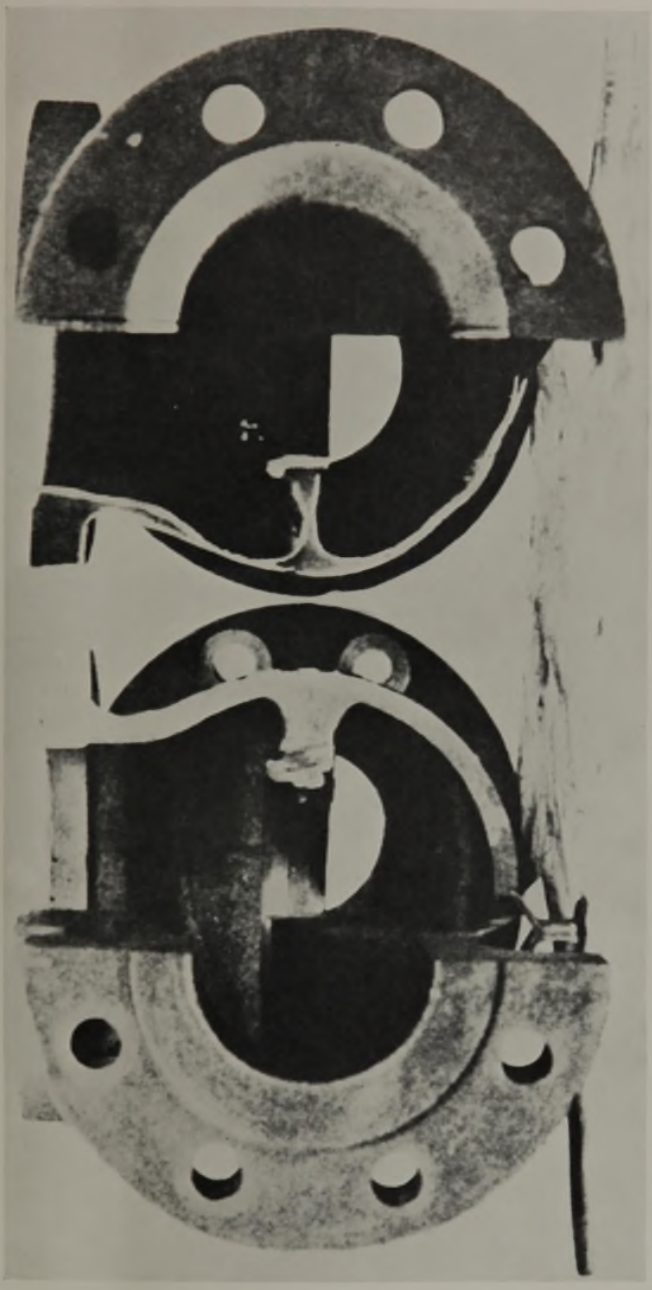

FIG. 3.

A CAST STEEL VALVE BEFORE AND AFTER CORROSION.

Note relatively excellent condition of alloy seat. This valve was removed from service because the partition was found to be corroded through as indicated by the white spots.

[*To face p.* 354.

FIG. 4.

THIS PHOTOGRAPH ILLUSTRATES THE RESULT OF CORROSION ON SECTION OF 4″ EXTRA HEAVY PIPE BEND.

Original thickness	0·337″
Present maximum thickness . . .	0·200″
Present minimum thickness . . .	0·020″

The inner line shows the thickness when new.

because the slightest change in operating conditions will affect the area where corrosion is most serious, either increasing or decreasing the corrosion, and probably moving the maximum corrosion point elsewhere.

It can truly be said that the only way to be sure of your plant is to inspect it thoroughly at every opportunity, overlooking nothing, however small, as it is these small items, such as liquid level lines, pyrometer wells or gauge connections, which, although they do not seem of much importance, are often the cause of an emergency shut-down.

Safety Instruction.

It is very often noticed where an accident occurs on a cracking unit, that the plant has been in service for some years, and the operating crews and clean-out men have become so accustomed to their work that they take risks which in the first few months of their service would " scare them stiff," and it is therefore only by insisting on the strict carrying out of all instructions that accidents can be avoided.

Accident prevention is all part of the duties of the safety and inspection department, and while inspecting material and checking corrosion rates is a very important part of the work of this department, it is by no means all.

One of the large refining company's safety departments some years ago laid down three essentials for safety, and these were known as the three " E "s :—

(1) Engineering.
(2) Enforcement.
(3) Education.

1. *Engineering* was said to be responsible for the elimination and prevention of a major portion of accidents by means of the safeguarding and strengthening of machinery and equipment, thus making possible safe operation at various pressures and temperatures.

2. *Enforcement* also contributed greatly to the prevention of accidents, inasmuch as safety rules and regulations, if ignored either by employees or supervisors, can be of no value in the protection of life or property, or in the prevention of accidents. Strict enforcement and adherence to the principles of safety are at all times necessary.

3. *Education* is of great importance in preventing accidents, and group meetings were found to be the most educational, and at the same time the most effective, method of impressing upon employees of all classes the importance and necessity of individual and collective responsibility in preventing accidents.

No doubt it must seem to the layman that many precautions are taken in connection with the operation of a cracking plant, some of which do not appear to be entirely necessary. However, experience has shown that it pays to keep the operators safety-minded, and the only way to do this is to insist on strict adherence to routine instructions.

The design of modern cracking plants has been so well worked out, and operating practice so well established, that no great amount of schooling is required to operate a cracking plant safely. However, the price of safety is constant vigilance, intelligence and ability to act quickly in any emergency which may arise.

THE DETECTION OF GAS IN THE FIELD AND REFINERY IN IRAN.

By the Chemical Department
Anglo-Iranian Oil Co., Abadan, Iran.

The detection of toxic gases in the Oil Fields and Refineries in Iran is a subject which has received careful attention since the inception of the petroleum industry in that country. Particularly has this been so with regard to the gas-freeing of tanks and other containers which have held petroleum products, in order to ascertain that such plant can be entered with safety.

Until recently, the Redwood Inflammable-Gas Detector has been in use for this purpose and although rather cumbersome has always given satisfactory performance. Since May 1938, however, the method has been superseded by the J. W. (Johnson-Williams) and M.S.A. (Mines Safety Appliance Co.) Combustible Gas Indicators. These operate on the principle that when the inflammable gas is brought into contact with a hot-platinum wire, the gas burns and the temperature of the wire increases. As a result its electrical resistance increases. This increase may be measured and correlated with the percentage of combustible material in the samples.

Detection of Hydrogen Sulphide.

It will be appreciated that if a tank has been steamed and aired until it is gas-free, it can also be considered as being free from hydrogen sulphide and therefore, in the refinery, no direct estimation for the detection of H_2S contamination of atmospheres is carried out.

The method of detection of hydrogen sulphide used at Fields in connection with the testing of tanks and areas adjacent to wells is due to the Mines Safety Appliances Co., Pittsburgh, U.S.A. This Hydrogen Sulphide Detector consists of a glass tube filled with absorbent, a mercury salt on granulated pumice. A sample of the atmosphere to be tested is drawn through the absorbent by means of an aspirating pump and the extent of the blackening in the tube gives a measure of the concentration of hydrogen sulphide. The method of the Department of Scientific and Industrial Research uses the comparison with standard papers of lead acetate papers blackened by formation of lead sulphide. The accuracy of the two methods has not yet been tested but both are capable of indicating dangerous atmospheres with certainty.

It is proposed to employ the Department of Scientific and Industrial Research method in connection with the preparation of solid carbon dioxide. The latter gas is formed during the manufacture of the hydrogen used in a commercial hydrogenation plant but may be contaminated with hydrogen sulphide derived from the process. The solid carbon dioxide

will be used in connection with the preservation of food-stuffs and hence an assessment of its purity is of the utmost importance.

Sulphur Dioxide Detection.

In the refinery, where kerosine is solvent-refined with liquid sulphur dioxide, the typical odour of this gas is usually more than sufficient to detect its presence. Sulphur dioxide is also evolved to a slight extent at the sulphuric acid manufacturing plant, at certain refrigeration plants, where treatment of petroleum products with sulphuric acid is carried out.

In order to ensure the safety of operators in emergencies, a canister-type of respirator is available which is capable of being used for ½ an hour. On the expiry of this period, the canister is withdrawn and condemned. For occasions where a longer period of use is required or where high concentrations of sulphur dioxide are encountered, an oxygen-type of apparatus is employed.

With regard to the actual detection of sulphur dioxide in the atmosphere, the method and apparatus suggested by the Association of British Chemical Manufacturers (dated 5/12/34) has been tried out. In this method, the atmosphere to be tested is drawn through a test-paper impregnated with starch and iodine–iodate solution, and the stain produced by a suitable number of strokes of a standard pump compared with standard stains. The set of apparatus comprises a standard exhausting pump with test-paper holder, a card of standard stains and instructions for preparing the test-papers.

A quantity of solution was prepared according to the instructions, and test-papers impregnated. Unfortunately the thick filter-paper recommended was not available. Ordinary white blotting paper and No. 4 Whatman filter-paper were tried, and the blotting paper was found to be more suitable, the No. 4 Whatman being too porous and producing a spotted stain.

An atmosphere containing known amounts of sulphur dioxide was produced by burning sulphur in a closed room, previously found free from sulphur dioxide, and circulating the air with a fan. One gram of sulphur per thousand cubic feet of air should have produced an SO_2 concentration of 1/40,000. Allowing for incomplete combustion and slight losses it was assumed that one gram per thousand cubic feet of air produced a concentration of 1/50,000. Atmospheres having a sulphur dioxide concentrations of 1/100,000, 1/50,000 and 1/20,000 were successively produced. It was found that the stains produced by these atmospheres although consistent, were less dense than the corresponding standard stain; 15 to 17 strokes of the pump in a given atmosphere being required to match the standard stain corresponding to 10 strokes. The stains were also more purple than the standard, making exact matching difficult. The lighter stains produced in Abadan may be due to the use of unsuitable paper, or to the high temperature of the tests in atmospheres of known concentration, compared with that under which the standards were presumably produced, or the standards may have been too heavily printed.

Test Under Working Conditions.

The atmosphere in various parts of the sulphur dioxide-extraction plants was tested by the suggested method when the plants were running free from leaks. Selected results are given below :—

Location.	Concentration of SO_2.
Building away from valves, pumps etc., No. 1 Plant	—1/250,000
No. 2 Plant	—1/250,000
Near SO_2 Pumps No. 1 Plant	1/125,000
No. 2 Plant	—1/250,000
Near Cold Extract Pumps No. 1 Plant	—1/250,000
No. 2 Plant	1/100,000
Cold Room No. 1 Plant	1/250,000
No. 2 Plant	1/100,000
Gas Cooler Room No. 2 Plant	—1/250,000
Sulphur Burner No. 1 ,,	—1/250,000
No. 2 Plant, Blowing Down	
Distilling Tank	—1/250,000
Separator	1/15,000
Lee Side, blowdown box	—1/5,000
Condensate Sump	—1/5,000

These concentrations were estimated on the basis of the tests in atmosphere of known concentrations, described above. Samples of atmosphere near valves, pumps, etc. were drawn at approximately the mouth level of a man working on such equipment.

It is seen that the general concentrations in the plant lies well below the maximum laid down by Henderson and Haggard, *i.e.* 1/100,000 maximum concentration allowable for exposures up to 6 hours. Near pumps and in the cold room it approaches this figure, and in the vicinity of the separator, blowdown box and condensate sump it is above the maximum allowable for even short exposures—1/20,000.

The authors wish to record their thanks to the Chairman and Directors of the Anglo-Iranian Oil Company for permission to publish this communication.

THE HANDLING OF PETROLEUM SPIRIT AND SOLVENTS.

By F. N. Harrap, B.Sc., M.Sc.*

In this paper an attempt has been made to summarize the various precautions which are taken (either because of legislation or as the result of experience) by the petroleum industry and by its customers (*a*) against the risk of fire or explosion and (*b*) against the danger to health through toxic gases.

The Petroleum (Consolidation) Act, 1928.

The Petroleum (Consolidation) Act, 1928, represents a consolidation of all the previous legislation dealing with petroleum products. The provisions of the Act apply to petroleum spirit—*i.e.*, all petroleum products with a flash-point (Abel closed test) below 73° F.—the definition of petroleum covering not only petroleum products, but also products from coal, shale, peat or other bituminous substances. The provisions of the Act have been extended, by Orders in Council, to cover petroleum mixtures (whether liquid, viscous or solid), calcium carbide and certain specified compressed gases.

There is no general legislative control over petroleum oils with flash-points of 73° F. or over, except that the London County Council possesses certain powers under its General Powers Act of 1912.

The main provisions of the 1928 Act (in so far as this paper is concerned) are the following :—

(1) *Storage Licences.*

(*a*) Petroleum spirit must not be kept without a licence unless (1) it is kept in separate glass, earthenware, or metal vessels, securely stopped and containing not more than one pint each, and aggregating not more than three gallons, or (2) it is kept and used for the purpose of motor vehicles, motor boats, aircraft and certain engines, under regulations made by the Secretary of State (summarized later under the Petroleum Spirit (Motor Vehicles, etc.) Regulations, 1929).

(*b*) The local authority empowered under the Act to grant petroleum-spirit licences is :—

In London—the L.C.C. (except in the City of London).
In other areas—the district council.

In the case of any harbour which is within the jurisdiction of a harbour authority (whether within the jurisdiction of a local authority or not) petroleum-spirit licences are granted by the harbour authority.

(*c*) A local authority may attach to a petroleum-spirit licence such conditions as they may think expedient, as to the mode of storage, the nature and situation of the premises in which, and the nature of

* Shell-Mex and B.P., Ltd.

the goods with which, petroleum spirit is to be stored, and generally as to the safe keeping of petroleum spirit. If an applicant for a licence is not satisfied with the conditions imposed by the local authority, he has the right to appeal to the Secretary of State.

(2) *Labelling of Vessels Containing Petroleum Spirit.*

Except where petroleum spirit is carried as fuel on a motor vehicle, ship or aircraft, there must be attached to (or, where this is not practicable, displayed near) any vessel containing petroleum spirit a label showing, in conspicuous characters, the words "Petroleum Spirit" and the words "Highly Inflammable." In addition, the vessels must be labelled with the name and address of the owner (where petroleum spirit is kept), the name and address of the sender (where it is sent or conveyed from one point to another) or the name and address of the vendor (where it is sold or offered for sale).

(3) *Loading and Landing of Petroleum Spirit in Harbours.*

Under Section 7 of the Act it is the duty of every harbour authority to make bye-laws for its harbour as to ships loading and landing petroleum spirit and for regulating the places at which ships carrying petroleum spirit are to be moored, and generally as to the precautions to be observed with such ships.

A model code of harbour bye-laws has been drawn up by the Ministry of Transport, and any bye-laws put forward by a harbour authority must be confirmed by the Minister of Transport.

(4) *Loading, Conveyance and Landing in and on Canals.*

Under Section 9 of the Act, canal companies are authorized to make bye-laws in the same way as harbour authorities, but these again are subject to confirmation by the Minister of Transport. The position of the canal companies differs from that of the harbour authorities in that the former have the power to make bye-laws, whereas the latter are compelled to do so.

(5) *Accidents in Connection with Petroleum Spirit.*

In the case of an accident involving loss of life or personal injury by explosion or by fire "in or about or in connection with" any premises licensed for petroleum spirit, the accident must be reported, with details of the loss of life or personal injuries. Similarly, accidents in connection with any ship or vehicle in which petroleum spirit is being conveyed, loaded or unloaded, must be reported to the Secretary of State, who is empowered to have an enquiry made, either by an inspector or by a court of investigation sitting in open court.

Petroleum Spirit for use in Vehicles, etc.

The Petroleum Spirit (Motor Vehicles, etc.) Regulations, 1929, cover the storage and use of petroleum spirit for motor vehicles, motor boats, aircraft and certain classes of engines. Subject to the restrictions outlined later, any spirit stored or used in such circumstances is exempt from the provisions of the Petroleum (Consolidation) Act, 1928, as regards storage

licences and conveyance by road or water. The main provisions of the regulations are :—

(1) *Keeping of Petroleum Spirit.*

Petroleum spirit must only be kept in metal vessels, and all containers must be labelled "Petroleum Spirit—Highly Inflammable," either indelibly marked on the container or, if impracticable, on an attached metal label. (This does not apply where the petroleum spirit is kept in the fuel tank of a vehicle, etc.)

Petroleum spirit, except when kept in a fuel tank of a vehicle, etc., must not be kept in any container of capacity exceeding 2 gallons unless (1) the storage place is at least 20 feet from any building, highway or public footpath, (2) provision has been made by excavation or by the erection of retaining walls to prevent the spirit flowing out of the storage place in case of fire, and (3) notice in writing that the petroleum spirit is proposed to be so kept has been given to the local authority. This notice must be renewed annually.

(2) *Storage Places.*

If not in the open air, storage places must be effectively ventilated, and if enclosed they must have an entrance direct from the open air. There must be, either in the storage place or as near to it as is practicable, some suitable fire extinguisher, or else a supply of sand or other effective means for extinguishing a fire.

If the storage place is part of, or is attached to, a building used as a dwelling-place (or a building where persons assemble), it must be separated from that building by a substantial floor or partition constructed of material which is not readily inflammable. The partition must have no opening, except in cases where the petroleum spirit is kept in not more than two containers, not exceeding 2 gallons each, in which case there may be an opening if this opening is fitted with a self-closing door constructed of hard wood or other fire-resisting material.

If the storage place is in any building, it must not be situated under a staircase, or under any means of exit likely to be used for escape in case of fire, unless it is separated by a substantial floor or partition of the type mentioned in the last paragraph.

(3) *Maximum Quantity to be Kept.*

Not more than 60 gallons of petroleum spirit must be kept at the same time in any one storage place, and this quantity *includes* any petroleum spirit in the fuel tank of, or otherwise carried on, any motor vehicle, motor boat, aircraft or engine within the storage place at the time. Any two storage places which are not more than 20 feet apart, and in the occupation of the same occupier are reckoned to be one storage.

Where a storage place is situated within 20 feet from any building, or of any stack of timber or other inflammable substance, the maximum amount to be kept (apart from any spirit in the fuel tank of a vehicle, etc.) is limited to four gallons—*i.e.*, two 2-gallon cans—unless notice in writing is given to the local authority, such notice to be renewed annually.

(4) *Use of Petroleum Spirit.*

(*a*) No operation involving the exposure of petroleum spirit must be carried on in the neighbourhood of any fire or artificial light liable to ignite inflammable vapour.

(*b*) Petroleum spirit must only be used as fuel in a motor vehicle, motor boat, aircraft or engine unless it is used as fuel in a lamp or other apparatus for lighting or heating, or unless it is used (in quantities not exceeding one gill at any one time) for cleaning or as a solvent for repair purposes.

(*c*) Petroleum spirit must not be wilfully or negligently emptied, turned, or permitted to enter, into any sewer or any drain communicating with a sewer.

(5) *Special Provisions Regarding Engines used on Road-making or Repairing.*

The regulations covering the keeping and use on any road of petroleum spirit for the purposes of any engine used in connection with the making or repair of roads are slightly different from those already mentioned. Reference should be made to the Petroleum Spirit (Motor Vehicles, etc.) Regulations, 1929, for further details.

The Transport of Petroleum Spirit by Road.

The regulations covering the transport of petroleum spirit by road, issued in pursuance of Section 6 of the Petroleum (Consolidation) Act, 1928, are contained in the Petroleum Spirit (Conveyance) Regulations, 1932 (S.R. & O., 1932, No. 1052). In this paper only the regulations dealing with conveyance in tank wagons will be summarized, and reference should be made to the Regulations for the provisions relating to conveyance otherwise than in tank wagons.

Tank wagons must be constructed in accordance with the provisions contained in the Schedule to the Regulations, their total capacity must not exceed 2500 gallons and the capacity of each self-contained compartment must not exceed 600 gallons. The filling and dipping pipes must be kept closed except during the actual operations of filling or discharge, and during such operations the engine of the vehicle must be stopped and adequate provision made to prevent accumulation of a dangerous static charge of electricity. If electric lighting is employed on the vehicle, the pressure must not exceed 16 volts, and the circuit must be heavily insulated, and must be independent of the chassis, the generator, battery, switches and fuses being carried in front of a fire-resisting screen.

The engine and the fuel tank must be effectively screened from the body of the vehicle by a fire-resisting shield carried down to within 12 inches of the ground, and up to the top of the cab, and also (unless the roof of the cab is of fire-resisting construction and is without an opening) to the level of the top of the tank. The exhaust must be wholly in front of this shield.

The fuel tank of a vehicle (other than an articulated vehicle) may be behind the shield if a fuel feed apparatus, placed in front of the shield, is used to lift the contents from the fuel tank and the fuel tank is protected from blows by the frame or by stout steel guards and the filling-hole cover is provided with a lock. The fuel tank *of any vehicle* may be behind the

shield if the fuel used in the engine has a flash-point of 150° F. or over (this would apply to all diesel-engined vehicles).

The dipping pipes of all vehicles must be carried down to the bottom of the tank, and any openings in them other than the upper orifice must be covered with fine wire gauze of not less than twenty-eight meshes to the linear inch. The filling pipes must be carried down nearly to the bottom of the tank, terminating in such a way as to provide at all times a liquid seal at the bottom of the pipe, or alternatively the covers over the filling openings must be provided with locks (in the County of London and in West Ham the liquid seal is compulsory where the capacity of a wagon exceeds 1000 gallons).

Although the 1932 Regulations specify that the filling pipes must terminate in a liquid seal (*i.e.*, some form of bucket), the modern practice is to use filling pipes which are not carried to the bottom of the tank and which do not have a liquid seal. These filling pipes are fitted with the Amal flame-trap, the use of which has been authorized by an exemption order issued in 1937. The Amal flame-trap is made of thin strips of non-corrodible metal layered together in a compact form, so that the strength to resist explosion forces is very high whilst the resistance to the flow of air or petrol is a minimum, and such flame-traps have also been used on aircraft (either between the carburettor and the cylinders, or on the carburettor intake) to eliminate danger through back-fire.

Processes Involving the use of Petroleum Spirit, and Classed by the Home Office as "Dangerous and Unhealthy Industries."

The list of processes certified by the Home Office as dangerous under certain sections of the Factory and Workshops Acts, includes the following processes in which petroleum spirit may be employed :—

(1) Manufacture, use and storage of cellulose solutions.
(2) Certain processes incidental to the manufacture of indiarubber.

Manufacture of Cellulose Solutions.

Regulations dealing with the manufacture, use and storage of cellulose solutions are given in the Cellulose Solutions Regulations, 1934 (S.R. & O., 1934, No. 990), and the regulations are amplified in a Memorandum issued by the Home Office in 1936 (Form 826).

The definition of "cellulose solution" in these regulations is "any solution in *inflammable liquid* of cellulose acetate, of cellulose nitrate, of celluloid, or of any other substance containing cellulose acetate, cellulose nitrate or any other cellulose compound, with or without the admixture of other substances." An inflammable liquid is defined as "any liquid or mixture of liquids used or intended for use in connection with cellulose solutions, which when tested in the manner set forth in the Second Schedule to the Petroleum (Consolidation) Act, 1928, gives off an inflammable vapour at a temperature of less than ninety degrees Fahrenheit." It will be observed that although liquids with flash-points over 73° F. come outside the scope of the Petroleum (Consolidation) Act, 1928, they still come within the Cellulose Solutions Regulations, 1934, if the flash-point is less than 90° F.

It is pointed out in the Home Office Memorandum of 1936 that most of the liquid constituents used in cellulose solutions produce toxic symptoms if inhaled in the form of vapour in sufficient concentration, and that "the most harmful of these liquids is benzol." Because of this toxic effect of benzol, the 1934 Regulations insist that certain additional precautions must be taken where benzol (*i.e.*, coal-tar benzene) is used as a component of cellulose solutions. No person under sixteen years of age must be employed "in the manipulation or use of cellulose solutions or inflammable liquids containing more than 15 per cent. by weight of benzene," and cellulose solutions or inflammable liquids "containing more than 15 per cent. by weight of benzene must not be procured or stored otherwise than in receptacles legibly marked as containing benzene." Certain petroleum solvents contain a proportion of benzene (C_6H_6) derived naturally from the original crude oil (and not added to the petroleum solvent in the form of coal-tar benzol), and to the extent to which the aromatic hydrocarbons in such petroleum solvents are benzene (C_6H_6) the solvents come within the scope of the 1934 Regulations.

Processes Incidental to the Manufacture of Rubber.

The Home Office list as dangerous certain processes incidental to the manufacture of indiarubber, these including any process "involving the use of carbon bi-sulphide, sulphur chloride, carbon-chlorine compounds, or benzol." The additional precautions to be taken when such processes are carried on are detailed in the Indiarubber Regulations, 1922 (S.R. & O., 1922, No. 329).

The 1922 Regulations define a "fume process" as "any process in which any of the following materials:—carbon bi-sulphide (CS_2), chloride of sulphur (S_2Cl_2), benzene (C_6H_6), whether pure or in the form of commercial benzol, carbon tetrachloride (CCl_4), trichlorethylene (C_2HCl_3), or any carbon chlorine compound, or any mixture containing any of such materials is used, or the vapour of any such materials is given off."

Ordinarily no person under eighteen years of age must be employed in any fume process (and no person under sixteen years of age in any room in which a fume process is carried on), and special regulations have been laid down to cover the question of ventilation, medical examination, etc., for further details of which the Indiarubber Regulations, 1922, should be consulted.

All petroleum rubber solvents with fractions boiling below, say, 90° C. contain benzene (C_6H_6) to a greater or lesser extent, and in consequence they should, strictly speaking, come under the "fume-process" regulations. In practice, however, the Home Office inspectors have authority to waive the regulations in cases where the benzene content does not exceed a certain low percentage (this discretionary limit is understood to be 5 per cent.).

Toxicity of Benzene.

It will have been noted that the Home Office regard benzol as dangerous, whereas they make no special regulations dealing with toluol or xylol, and it is interesting to see how the various authorities on the subject differ in their opinions as to the relative toxicity of the three solvents.

Henderson and Haggard (American Chemical Society's monograph "Noxious Gases") state that some observers believe toluene and xylene to be more toxic than pure benzene, whilst others arrive at the opposite conclusion. Their own feeling is that there are probably no great differences in toxicity between the three compounds. These authors point out that the hydrocarbons of the benzene series are not much more toxic than the corresponding petroleum distillates in the production of acute symptoms, but that prolonged inhalation of benzene and its homologues, even in small amounts, leads to subacute and chronic poisoning, whereas a similar condition does not follow from exposure to petroleum distillates.

The Medical Research Council, in their book "Toxicity of Industrial Organic Solvents," refer to the differences of opinion of various writers on the toxicity of toluole, and especially on its toxicity relative to that of benzole, and, after quoting these various opinions, they conclude by saying, "It appears to be agreed that pure toluole is on the whole less toxic than benzole, on account of its less rapid volatilisation, but that if used over a long period it may produce severe toxic effects." Their conclusions regarding xylole are that, judged by its chronic effects in human beings, xylole appears to be certainly less toxic than benzole, but whether it is more or less toxic than toluole is uncertain.

Static Electricity.

The conditions which favour the production of a static electrical charge when a liquid flows through a pipe or nozzle are: (*a*) dry atmosphere, (*b*) high liquid velocity and (*c*) good insulation from the earth of the pipe or container into which the liquid is flowing. Recommendations to the effect that storage tanks, filling-arms and road or rail cars should be efficiently "earthed" during the progress of the filling operation were made by the Home Office as far back as 1925 (Form 1804, July 1925).

A further reference to static electricity is made in a Home Office report of 1938 ("Explosion in Kerosine Tank at Killingholme, Lincolnshire"), which quotes the results of tests carried out in Germany and given in the 1924–5 Report of the Chemisch Technische Reichsanstalt. In the report it was stated that when petroleum spirit traverses a narrow tube with sufficient velocity, a charge of 20,000 volts between the petrol and the tube walls can be obtained.

Large storage tanks are earthed by means of a copper tape (say 1 inch in width and $\frac{1}{8}$ inch thick), which is sweated and riveted to a copper plate 4 feet long and 1 foot wide, the plate being placed vertically in (wet) ground. The junction between the tape and the plate should be above ground-level. In the case of tanks fitted with Victaulic flexible pipe-joints the connection to the earth plate is made with flexible braided copper wire, wrapped round the hose so that each section is in metallic contact with the earthing wire.

Provision is also made for earthing pipe-lines, exchange pits, rail sidings, rail and road wagon filling-arms, and barrel steaming plants, the connection to the earthing tape being made by a metal clip or other more suitable method.

In the case of road wagons it was formerly the practice to earth the vehicle by means of a braided steel wire rope attached at one end by a clip

to the stand post and at the other end to a contact plug. This contact plug acted as a key, without which the manhole cover of the vehicle could not be opened. With the modern-type delivery hose, which has an external metallic armouring, the two ends of the hose are in metallic contact, and there is no necessity to have an " earthing plug " of the old type (certain types of hose are not externally armoured but have a metallic wire inside the hose), since the vehicle is electrically connected with the filling-arm.

Dry-Cleaning Processes.

The Home Office issued a " Memorandum on Dry Cleaning " in 1924 (Form 824) pointing out the dangers involved and recommending various precautions, of which the most important (apart from " earthing ") were :—

(*a*) All rooms in which spirit is used should be humidified by means of steam or water so as to maintain a condition of at least 70 per cent. saturation.

(*b*) The use of magnesium and aluminium oleates, mixed with the spirit to improve its electrical conductivity, should be encouraged.

(*c*) Air should be excluded from washing-machines, centrifuges, etc., as far as possible, a reference being made in the Memorandum to the use of live steam and carbon dioxide gas.

Hartshorn and Ward (*J.S.C.I.*, June 1938) point out that static electric charges are often generated by friction in the dry-cleaning of fabrics. Special soaps are used in the dry-cleaning industry, partly for their cleaning properties, and partly because they minimize the generation of static electricity. The experiments of Hartshorn and Ward show that the conductivity of the cleaning liquid can be considerably increased by the addition of a small quantity of a soluble soap which contains water, but that fabrics remove the water from the liquid and lower its conductivity so that fresh soaps must be added at intervals. According to these authors the conductivity of the cleaning-bath should be not less than 10×10^{-12} mho per cm. (the usual value for solvent alone, without soap, is of the order of $0{\cdot}5 \times 10^{-12}$ mho). A portable instrument for measuring the conductivity of such liquids has been devised by the National Physical Laboratory (*Chem. Trade Journal*, July 1, 1938).

Solvent-Recovery Processes.

During the last five years or so considerable development has taken place in the installation of solvent-recovery plants, particularly in the case of the rubber-proofing trade, and it is certain that this development has reduced the fire hazard, apart altogether from its economic aspect.

In most of the recovery plants the mixture of air and solvent vapour is absorbed by activated charcoal, the solvent subsequently being recovered by steaming and condensation. Recoveries of the order of 90 per cent. and over are claimed for these processes. The concentration of petrol vapour in the mixed gases should preferably be below the lower explosive limit (say one per cent. petrol vapour), but it is claimed that the process can deal economically with petrol-vapour concentrations down to as low as 0·05

per cent. In the modern recovery plant the whole ventilation of the spreading-room goes to the absorption plant, the spreading machines being fitted with carefully designed hoods which can collect the solvent vapours and prevent their diffusion into the room.

Miscellaneous Home Office Recommendations.

Amongst the more important memoranda issued by the Home Office, and not previously mentioned, are Form 297, June 1937, "Precautionary Notes for Users of Volatile Organic Solvents," and Form 814, January 1930, "Memorandum on the Cleaning or Repairing of Oil and Acid Stills and Tanks in Factories."

A permanent exhibition of methods, arrangements and appliances for promoting the safety, health and welfare of industrial workers is to be found at the Home Office Industrial Museum, Horseferry Road, Westminster.

THE SAFETY OF ELECTRICAL APPARATUS FOR USE IN INFLAMMABLE GASES AND VAPOURS.

By Captain C. B. Platt,* M.B.E., M.I.Min.E., M.I.E.I.

Synopsis.

This report deals with design of bells, telephones and lamps which are intrinsically safe for use in atmospheres containing petroleum vapours. The difference between intrinsically safe electrical apparatus and flame-proof enclosures is indicated.

The Mines Department of the Board of Trade maintains Testing Stations at Sheffield and Buxton, which assist the Department by giving technical advice on those questions of safety which come within their scope; in view of the fact that the Factory Department of the Home Office lacks similar facilities, an arrangement has been made whereby the Mines Department Testing Stations give technical advice to H.M. Chief Inspector of Factories and H.M. Chief Inspector of Explosives to enable them to issue certificates of safety of apparatus intended for use in the petroleum industry or other industries possessing similar hazards.

The full appreciation of the danger of using unsuitable electrical equipment in the petroleum industry and in other industries in which inflammable gases or vapours may be a hazard is relatively recent: perhaps it would be more correct to say that the danger has been long appreciated, but that it is only as a result of increasing technical knowledge during the last year or so that manufacturers are now able to supply safe equipment. A brief account of the present position can best be presented in the form of a picture of the development of safe electrical apparatus for use in the coal-mining industry, for that industry is its nursery.

In coal-mining the first line of defence against gaseous explosions is that of adequate ventilation, adequate at all times to remove firedamp from the travelling roads and working places; unfortunately this ideal is not always capable of achievement, for working difficulties such as interruption of the ventilation due to falls of ground may at some time or other result in the accumulation of inflammable gas; any apparatus of unsuitable design which may be in use in the affected area may in consequence ignite the accumulated gas.

Much thought and labour has been expended during the last twenty-five years in the matter of evolving safe electrical apparatus for use in coal-mines in which firedamp is a hazard; the fruits of those labours are now being gathered and applied to other industries.

As in coal-mining, so in the petroleum and other industries, adequate ventilation should be regarded as the first line of defence; but as breakdown of ventilation plant or other safeguarding appliances may at times result in dangerous atmospheric conditions, safe apparatus must be employed in potentially dangerous areas to prevent ignition.

* Superintending Testing Officer, Mines Department Testing Station, Sheffield.

Generally speaking, electrical equipment in industry can be divided into three main groups :—

(*a*) Power plant, such as heavy electric motors, switchgear, transformers, etc.;

(*b*) Communications, such as signalling bells, telephones or other light-weight equipment requiring small current;

(*c*) Lighting, either from power mains or by self-contained portable or semi-portable equipment.

Power Plant.

The heavy equipment used for power can be prevented from becoming a source of ignition of gas only by enclosing the live parts in suitable enclosures. Suitable enclosures are known as " flameproof enclosures," and consist of robust iron or steel cases having wide metal-to-metal flanged joints between the cover and body of the enclosure, and of such design that the flame of any gas which may be ignited within the enclosure cannot ignite an inflammable ambient atmosphere due to the cooling action on the flame of the wide flange. It should be well noted that the term " gas-proof " or " gas-tight " enclosure is not recognized by the authorities on this method of protection, for the reason that it has been found impossible to design electrical power equipment in such a manner that, with the wear and tear of service conditions, the exclusion of inflammable gas from the enclosure can be assured; this being so, it is the standard practice to prevent flame, if produced within the enclosure, from escaping from the enclosure and igniting a surrounding gaseous atmosphere.

In considering the method of flameproof enclosure, it is necessary to bear in mind that the safety of the enclosure is associated with the safety of the external connections, consequently it is necessary to connect one unit with another by means of adequately armoured cable; the necessity for this is obvious, for dangerous sparks or arcs may be produced on the exposed conductors of a damaged cable.

Testing of the flameproof enclosure of electrical apparatus, for manufacturers, was undertaken in 1922 by the Mining Department of Sheffield University, under the direction of the Professor of Mining.

In 1926 the British Engineering Standards Association, now the British Standards Institution, in order " to co-ordinate the various definitions of flameproof enclosure as applied to electrical apparatus," published a specification, B.S.S. No. 229—1926, to define the meaning of the term and to prescribe the nature of the tests to be applied to establish compliance with that definition.

In 1931, the Mines Department of the Board of Trade took over the work of testing previously carried out by Sheffield University, and established a Testing Station for flameproof electrical apparatus at Harpur Hill, near Buxton, and undertook to issue official certificates, which are popularly known as " Buxton certificates."

At the beginning of 1935 the Secretary for Mines registered the now well-known mark, the letters FLP within the outline of a crown, under the Trade Marks Acts, 1905 to 1919, in order to facilitate the identification of electrical apparatus of certified type.

The safety of certified flameproof apparatus is dependent on proper installation by a suitably qualified staff; its continued safety is dependent at all times on adequate supervision and maintenance, again by qualified persons; it is particularly necessary to lay emphasis on this point for the reason that the cause of certain explosions in coal-mines in which suitable equipment has been installed has been ascribed to inadequate maintenance. The necessity for adequate maintenance of safe apparatus in the petroleum industry is no less than that in the mining industry.

In the present state of the art, there are no means of rendering the arcs and break-flashes produced by heavy power-plant non-incendive, and the method of flameproof enclosure is the only practical safeguard against ignition of ambient gas.

Communications.

The apparatus falling within the classification (*b*) "communications" constitutes what may be termed light-engineering equipment; such apparatus is also capable of producing incendive sparks. It will readily be appreciated, however, that to enclose, for example, a bell or a telephone in a flameproof case may be inconvenient, and certainly costly, in a system in which many such units may be used. Fortunately, it is possible to render the spark from such apparatus innocuous by relatively simple means.

All electrical apparatus, such as bells, relays, telephones and many other appliances of like nature, employ in their design some form of electro-magnet which, when the circuit is interrupted, gives rise to a spark or break-flash which is increasingly incendive with increase in the self-induction of the circuit of which the electro-magnet is the source.

In 1913 the cause of the explosion [1] at the Senghenydd Colliery, Glamorganshire, resulting in the loss of 439 lives, was ascribed by the Commissioner of the Inquiry to an ignition of firedamp by a spark produced on the line circuit of an electric-bell signalling system. It was at that time, and still is, the prevalent practice in coal-mines to use bare-wire line circuits as a matter of economy and convenience, for the cost of the line wires is reduced to a minimum, and the system has the advantage that signals can be given from any, and not of necessity one or more fixed, points in the circuit. Up to the time of the Senghenydd disaster it was not fully appreciated that even low-voltage inductive circuits, such as those of battery-operated bells, were capable of producing readily incendive sparks, and that the sparks were not necessarily produced at the source—*i.e.*, the bell—but at a point on the external lines at which the circuit was made and broken by the act of signalling. A sequel to the explosion was that the results of investigations by Wheeler,[2] and later by Wheeler and Thornton conjointly,[3] showed that it was possible so to modify the operative winding of a bell that the inductive surge produced by breaking the current-carrying circuit no longer produced incendive sparks, and that, in consequence, the principle of using bare-line wires could be safely continued. In brief, the result of these investigations led, in subsequent years, to the official certification of types of mine signalling bells and relays by the Mines Department of the Board of Trade as safe and suitable appliances for electric signalling in coal-mines in which firedamp was a

hazard. Such apparatus was, and still is, known as " intrinsically safe " apparatus * for the reason that no spark, whether produced at the apparatus itself or on any part of an associated circuit, will ignite the gas in which it is designed to be used.

It was subsequently found that other low-powered electrical apparatus possessing self-inductance could be similarly modified so that it failed to produce incendive sparks when the circuit was broken. For instance, blasting or, as it is known by mining men, shot-firing is carried out by the use of officially permitted explosives known as " safe explosives "; the charge is fired by an electric detonator, furnished with current from a magneto generator or exploder. The exploder is attached by a light cable to the ends of the detonator leads protruding from the shot-hole. It was found that firedamp could be ignited by an incendive spark formed at a point of momentary contact between the leads (frequently stripped of insulation by the force of the shot) during the disturbance of the shot; by modifying the armature winding, however, the exploder could be converted from an unsafe to a safe apparatus, in that whilst sufficient current was provided to fire the detonator, a spark produced by the magneto exploder on any part of the firing circuit would not ignite an inflammable mixture of firedamp and air. This development resulted in the compulsory use of safe approved exploders in coal-mines in which gas was a hazard.

The compulsory use of safe exploders was followed a year or two later by further legislation by the Mines Department with respect to mining telephone systems, for it had been found that the magneto generators used in such systems were readily capable of producing dangerous sparks either at the generator itself or at some other part of the system; again the result of investigation showed that it was possible to modify the windings or provide an additional component to the generator, or other source of self-inductance, such that incendive sparks could not be produced at any point in the system.

The application of the principle of intrinsic safety is now being extended to a multiplicity of types of electrical apparatus for use in mines. With the increased mechanization of mines, the relatively simple battery-operated signalling system of earlier years is being replaced by more extensive, and therefore more complicated, systems; an example of the tendencies in this direction is a recent proposal automatically to control mine haulage systems by means of a signalling system. The principle of making such systems intrinsically safe is no different from that applied to the single systems of earlier years. In mines in which alternating current is used for power purposes, the signalling system may now be operated from the power mains through a suitable transformer; in such cases it is necessary to take account not only of the intrinsic safety of the bells or relays in the system, but also that of the secondary winding of the transformer, which must be so designed that it shall be incapable of producing an incendive spark on the lines or at the apparatus connected thereto.

* Information concerning the requirements as to official test and certification can be obtained on application to the Under-Secretary for Mines, Mill House, 87–89, Shaftesbury Avenue, London, W.1.

The principle of applying intrinsic safety to simple telephone systems has also been extended to more complicated systems, which include not only the telephones themselves, but also exchange boards and extension instruments. The connection of safe subterranean telephone lines to unsafe systems on the surface, and in some instances to the G.P.O. system, has necessitated the development of " coupling units " of such design that incendive sparks from the unsafe system—which it is impossible or inconvenient to suppress at the source—cannot be passed beyond the coupling unit to the intrinsically safe system in the mine.

The principle by which intrinsic safety is achieved is that of limiting the value of the voltage and current delivered by the source and suppressing the spark due to the voltage rise following the breaking of an inductive circuit.

Firstly, as to the source of current for apparatus such as battery-operated signalling bells and relays, it is necessary to limit the voltage and short-circuit current; this is most conveniently achieved by using cells having an inherently high internal resistance, such as Leclanché cells; alternatively, the source of supply may consist of a rectifier provided with a limiting resistance as an integral part of the design. It is not good practice to use batteries or other source of current of low internal resistance to which a limiting resistance is connected externally, for the resistance may be accidentally omitted during maintenance—or deliberately removed in order to increase output, at, of course, the expense of safety. It is necessary similarly to restrict the short-circuit current of transformers for use with apparatus worked by alternating current; this is effected by designing the transformer so that its inductance is limited, and by including a limiting resistance in series with the secondary winding as an integral part of the unit.

Secondly, as to the apparatus connected to such sources, it is necessary to reduce the energy in the spark due to the self-inductance of the operative windings; there are several ways in which this can be achieved, typical of which is the connection of a non-inductive shunt across the source of inductance or, alternatively, and what amounts to the same thing, providing the required damping effect by the use of a copper sleeve interposed between the iron core and the operative winding. Another alternative is to connect a small static condenser across the coils, or a further alternative is the use of a small copper oxide rectifier instead of a non-inductive shunt. The presence of a safety device tends to reduce the efficiency of the apparatus to which it is applied, and of the several means available, a static condenser or, alternatively, a small rectifier reduces the efficiency of operation to a lesser extent than a non-inductive shunt or copper sleeve, without sacrificing safety.

The incendive properties of the sparks produced by inductive circuits are detected by means of a " break-flash " apparatus. This consists of a small gas-chamber containing a fixed platinum electrode with which a rotating platino-iridium electrode makes contact; the rotating electrode is sharply pointed, and is so shaped that contact with the fixed electrode is made slowly and rapidly broken. The apparatus is calibrated by suitable adjustment of the electrodes, so that all tests are made under standard conditions; it can readily be included in series with any circuit

the safety of which it is desired to determine. Other tests include an examination by means of a cathode-ray oscillograph of the current and voltage wave-forms at the moment the circuit is broken.

The approval of the Mines Department of the Board of Trade of electrical apparatus for use in mines in which firedamp is a hazard is based on the result of type tests of representative samples; the approval document is accompanied by a schedule of the relevant characteristics of the apparatus on which its safety depends, together with certified engineering drawings. The approval document contains a proviso that no change shall be made in the design of apparatus without the sanction of the approval authorities, and that no departure shall be made from the conditions of installation or working which may be imposed by the document. An example may not be out of place; the approval document issued for a type of, say, magneto telephone specifies that the generator shall have magnets of certain material and of certain magnetic flux. If, without further official test, the manufacturer increases the efficiency of the generator by using different magnetic material having a greater flux than that permitted by the approval document, he may then be supplying a generator capable of producing incendive sparks. Similarly a change in the number of turns of wire of, say, an armature winding may have the same effect; in other words, no unauthorized change in the electrical characteristics may be made without authority.

Lighting.

Broadly speaking, the danger to be feared from lighting equipment is mainly that of the possibility of an incandescent filament of a lamp-bulb being exposed to an inflammable atmosphere. From the point of view of safety, lighting from a mains supply differs only from a power circuit in the fragility of the lamp-bulb and its protecting glass, and for this reason lighting fittings must be of robust design with adequate protection of the cover-glass and the lamp-bulb. Lighting fittings are now available bearing the Mines Department " FLP " approval for use in association with armoured cable connection.

Another class of equipment for use where compressed air is available is the self-contained lighting unit known as a pneumatic electric lamp, in which a small turbo-electric generator supplies current to the lamp-bulb contained in the same unit; such units are provided with a safety device which, in the event of fracture of the outer protecting glass, interrupts the current to the lamp-bulb. Pneumatic electric lamps are now in extensive use; they are robust, and will operate for long periods if simple measures of maintenance are taken, and as they have no external connections and are scavenged continuously with fresh air, they have a high factor of safety.

Portable or semi-portable self-contained electric lamps constitute a separate class, for their design is necessarily restricted by conditions of weight; furthermore, their portability tends to rough usage—often to an undesirable extent. The circuit in a portable lamp is non-inductive, and of only a few volts, and the spark produced by switching the circuit on and off is less intense than that of the inductive circuits previously dis-

cussed; consequently, so far as safety for use in firedamp is concerned, it is unnecessary to require the enclosure to be to the same standards as those demanded for flameproof enclosures, and it suffices if the battery is enclosed in a sufficiently robust and locked container to protect it against wear and tear and unauthorized interference. As with mains-lighting fittings, however, it is necessary to prevent the filament of the lamp-bulb from being exposed to an inflammable atmosphere by protecting the bulb with a strong glass.

The developments which are now taking place in the matter of safety in the petroleum and other industries in which inflammable gases or vapours are hazards are the logical result of research and practical experience in the coal-mining industry, experience which extends over many years. The brief summary of some of the developments in the coal-mining industry has been given in order to indicate certain broad principles which are equally applicable to the petroleum industry.

Unfortunately, the protection of electrical apparatus against ignition of gases and vapours other than firedamp is not altogether straightforward, for, owing to the varying properties of gases, apparatus which is designed to be safe for use in firedamp is not necessarily safe in other gases; consequently, whilst retaining the principle, it is at times necessary to modify the design of safe mining apparatus before it can be made safe for use in other gases.

Reference has been made to the safe use of electrical power plant in mines by the method of flameproof enclosure. As a result of research, it has been found possible to classify a number of gases and vapours commonly encountered in industry in accordance with their relative danger or ability to pass an incendive flame through a flanged metal-to-metal joint or other device serving the same purpose. The classification is at present as follows :—

Group I. Methane, to cover the coal-mining industry.
Group II. Pentane and acetone, to cover the petroleum and cellulose paint industries.
Group III. Coal gas (town's gas) and coke-oven gas, to cover the gas-making industry.

Apparatus certified as safe in Group I gases is not safe for use in Groups II and III gases; on the other hand, apparatus certified in a higher group is, *ipso facto*, safe for use in a lower group. Other gases or vapours will be added to these groups or further groups added as and when data are available.

Increasing interest is being taken in the question of the intrinsic safety of apparatus in what for convenience may be termed the " communications " group. The principles which have been applied to signalling, telephone and other appliances for use in mines are being equally well applied to appliances of a like nature for use in other industries, in that they depend on the use of electro-magnetic components such as relays or components possessing self-inductance, and to which safety devices of the types already referred to can be fitted.

It may now be well to refer to the machinery which exists at the present

time for the official testing and approval of intrinsically safe electrical apparatus for use in industries other than mining. Type tests are made at the Mines Department Testing Station for and on behalf of the Chief Inspector of Factories, Home Office, who on receipt of a satisfactory report from the Testing Station issues a certificate of approval. The certificate is accompanied by a schedule of relevant and essential data of design together with certified drawings.

Certificates have now been issued by the Home Office for a variety of apparatus, such as a petrol level indicator, a relay equipment for printing-press control, a radio valve-tester, recording thermometer, gas-flow meter, etc. The principle used in making these and other apparatus safe is similar to that used for certain mining apparatus—namely, the appropriate application of non-inductive shunts, condensers, limiting resistances and so on to the inductive parts of the circuit giving rise to incendive sparking. It will not be out of place to reiterate the remarks as to the necessity for ensuring that no change is made to the electrical characteristics of such circuits, otherwise their originally safe nature may be destroyed, and to the further necessity that the apparatus be systematically and properly maintained by suitable personnel.

As regards the safety of mains lighting in hazardous areas in the petroleum industry, it will suffice to say that the design of the equipment should follow that applied to equipment for use in mines, and the same standards of installation and maintenance are necessary. Flameproof mains-lighting fittings have been approved for use in Group II vapours—that is to say, those vapours appropriate to the petroleum industry.

The use of hand-lamps, connected at the end of a flexible lead, as those in common use in garages, is to be deprecated, for however well the lamp-bulb may be protected against breakage, the possibility of damage to the insulation of the flexible lead is ever present, and dangerous sparks may be produced thereat; many accidents have in fact been ascribed to this kind of equipment; its advantages might, however, be retained by taking the current supply, not directly from the mains but from a small transformer, the secondary winding of which is intrinsically safe, as in the manner previously described, and using a low-voltage bulb in a suitable fitting. The possibilities of such equipment are at present under consideration.

Finally, as to portable self-contained lamps. These take the form of a bull's-eye inspection lamp or dry-battery torches. Generally speaking, these are similar in form to those approved for mining use. They are fitted with a lock—usually in the form of a lead seal—which should be properly secured during use. The protecting glass over the bulb is of the toughened or " armour-plate " variety and a metal grid protects this in turn. Torches and lamps for use in the petroleum industry have been officially approved by the Home Office; as it is probable that these lamps are subjected to rougher treatment than other classes of safe apparatus, proper care in their maintenance is essential; it would be wise for the owners of inspection lamps and torches to recall them daily from the workmen and clean and inspect them before re-issue the following day.

References.

[1] R. A. S. Redmayne, C. B. Evan Williams and Robert Smilie, "Home Office Report on the Cause attending the Explosion at Senghenydd Colliery." H.M. Stationery Office, 1914. Price 1*s.* 6*d.*

[2] R. V. Wheeler, "Home Office Report on Battery-Bell Signalling Systems as regards the Danger of Ignition of Firedamp–Air Mixtures." 1915. H.M. Stationery Office.

[3] R. V. Wheeler and W. M. Thornton, "Home Office Report on Electric Signalling with Bare Wires so far as regards the Danger of Ignition of Inflammable Gaseous Mixtures." 1916. H.M. Stationery Office.

FLAME ARRESTORS.

By H. H. Radier.*

In the storage and manipulation of petroleum products the occurrence of explosive mixtures cannot always be avoided. The existence of such an explosive mixture may be inherently connected with the vapour pressure of the product at the prevailing temperature, but it may also be caused by the fact that a certain time is required for complete saturation of the air, so that even liquids with such a high vapour pressure that in the state of equilibrium their vapours are above the upper explosive limit, will give off explosive vapours during a certain period of the progressive saturation of the air in contact with the liquid.

In view of the above, the possibility of explosions should be reckoned with. It is the purpose of this paper to describe the working of so-called " flame-arrestors " and the way they should be installed, in order to prevent either a flame or an explosion from the outside from entering and igniting a space containing an explosive vapour, and also that an explosion cannot spread between two spaces interconnected by a vapour line.

The most generally known type of flame-arrestor is based on the rapid removal of the heat of combustion during the passage of the burning gases, so that they are extinguished. This principle is incorporated in the safety mine-lamps, the Davy wire screen of which fulfils the function required. This wire screen is very effective for the purpose in view, but in consequence of its relatively small dimensions, it is only sufficient for the small volume of gas contained in the lamp within the screen.

For technical application of similar wire screens on a larger scale—for instance, in vapour lines, etc.—the heat-conducting capacity could be increased by using several layers. However, the resistance against flow of gas would then also be greatly increased, and, moreover, screens are liable to get clogged. For these reasons they can in general not be recommended for such purposes.

The systems in use are mechanically of different construction, but they are all based on the same principle : a large surface offering as much contact as possible to the gases, so that a large amount of heat can be quickly absorbed and drawn off; at the same time the aim is to keep the resistance against flow reasonably small, while the construction should be sufficiently strong mechanically. If executed in metal, a material is used having a high heat conductivity, in order to be able to keep the dimensions small. Various firms have suitable designs on the market; they consist, as a rule, of strips of metal wound in such a way that a great number of small passages are formed. As an example of a very reliable design, fairly cheap to construct and easily cleaned, but necessarily with larger dimensions than the all-metal types, the so-called " gravel-boxes " should be mentioned. They will be described in some detail below.

In order to obtain efficient protection, it is not sufficient that a suitable design of flame-arrestor be used; also the way in which it is installed should

* Bataafsche Petroleum Mij., The Hague.

meet certain demands which will be readily understood when the principles of its operation are considered. From the fact that the working of the flame arrestors as described is based on the extraction of heat from the gases, it is evident that the amount of burning gas flowing through the flame arrestor and its velocity of flow play an important part.

In the case of a flame arrestor of proper design placed at the end of a pipe open to the atmosphere, and through which an explosive mixture is flowing, an explosion occurring in the atmosphere will be withheld from entering into the pipe without difficulty. The explosion taking place in the open atmosphere cannot create an overpressure which drives large quantities of burning gas through the flame arrestor. What is flowing back through it into the line travels with the normal speed of propagation of the explosion, which is only comparatively low, and its heat can be easily drawn off and the flame extinguished.

When, however, somewhere in the pipe-line, and not in the immediate vicinity of the flame arrestor, an explosion starts, the explosion wave starts with the low velocity of the explosion propagation, but as a result of the building up of the pressure in the closed line, the velocity greatly increases, so that a large volume of burning gases is driven with great velocity through the flame arrestor. It is evident that in this case this apparatus will be under quite different and much more unfavourable conditions, and in general it will not prevent the explosion from passing through.

Tests have been carried out with a layer of small aluminium Raschig rings in a pipe, and it was found that the required thickness of the layer increased, when the gas volume of the exploded gases increased. It will be easily understood that for practical purposes with large gas volumes and long pipe-lines (for instance, in the case of interconnecting the vapour spaces of tanks) the size of flame arrestors, when simply inserted in the lines, would have to be enormous to guarantee proper protection. Their resistance against flow would be very great, and it would be practically impossible to determine their safe dimensions, which should, moreover, be different for varying cases.

However, it is possible to arrive at a practical solution for obtaining efficient protection, when the layout is made in such a way that the explosion wave, with the large amount of burning gas arriving with great velocity at the flame arrestor, is given a direct outlet. In that case the flame arrestor is more or less in the same position as that described above—namely, at the end of a pipe-line with an explosion occurring in the open atmosphere. There is no intense flow of burning gas through it, because the pressure has been released. The heat of the remaining part which is going through can be readily dissipated, so that the flame is extinguished.

The direct outlet to the explosion wave can be given by means of an explosion disc. It is, however, essential that the explosion disc should be placed perpendicular to the direction of the oncoming wave. A different position of the breaking disc will not sufficiently relieve the flame arrestor, and the explosion will go through.

The accompanying photos and sketches illustrate experiments carried out with a gravel box made of a piece of 12-inch pipe, length about 1 metre, provided with two 4-inch nozzles at 0·75 metre centre distance and filled

with gravel. The pot was fitted between two lengths of 6-inch pipe, shut off at the free ends. The pipes and gravel box were filled with an explosive gas–air mixture, which was ignited on one side of the pot by an electric spark. The progress of the explosion was made visible by sprinkling some barytes powder in the pipes. Without breaking flanges, the explosion

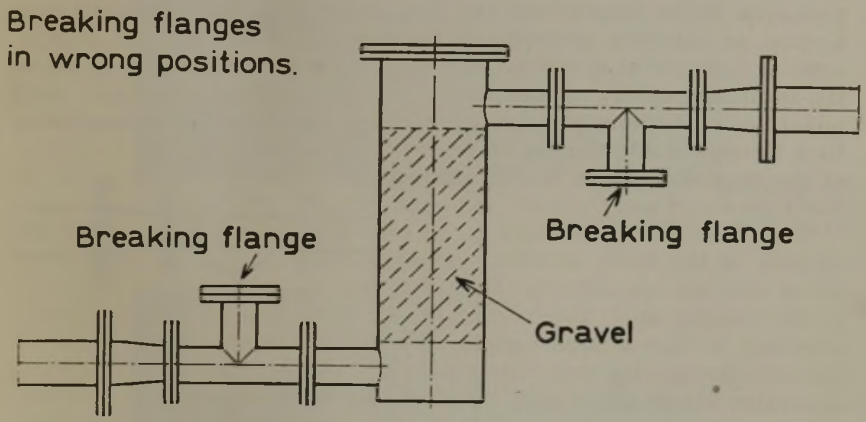

Fig. 1.

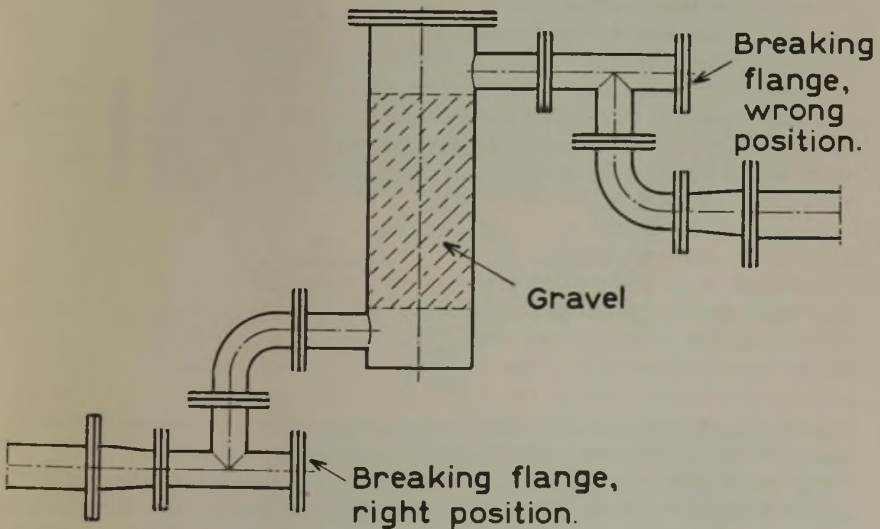

Fig. 2.

passed right through the gravel box to the pipe on the other side, where the loose covers of two large rectangular holes in the pipe were blown right off. With breaking flanges fitted in nozzles, at an angle of 90° to the pipe (vide Fig. 1), the gravel box also completely failed to arrest the explosion, which is apparent from Plate I.

With a breaking flange as arranged in Fig. 2 the explosion coming from

the left-hand side was free to escape in front of the gravel pot, and did not pass through it. Only some gas was noticed to blow out, resulting from the slight overpressure required for the rupture of the breaking flange (vide Plate II).

That no explosion took place behind the pot was proved by afterwards igniting the mixture on this side (Plate III).

The arrangement of Fig. 2 will only arrest an explosion coming from the left side, whilst that in Fig. 3 will arrest explosions from both sides.

For a practical design of a gravel box, see Fig. 4. The layer of gravel has a height of about 1 metre, the size of gravel being 2–3 cm. Such gravel boxes are being employed in large numbers in interconnecting

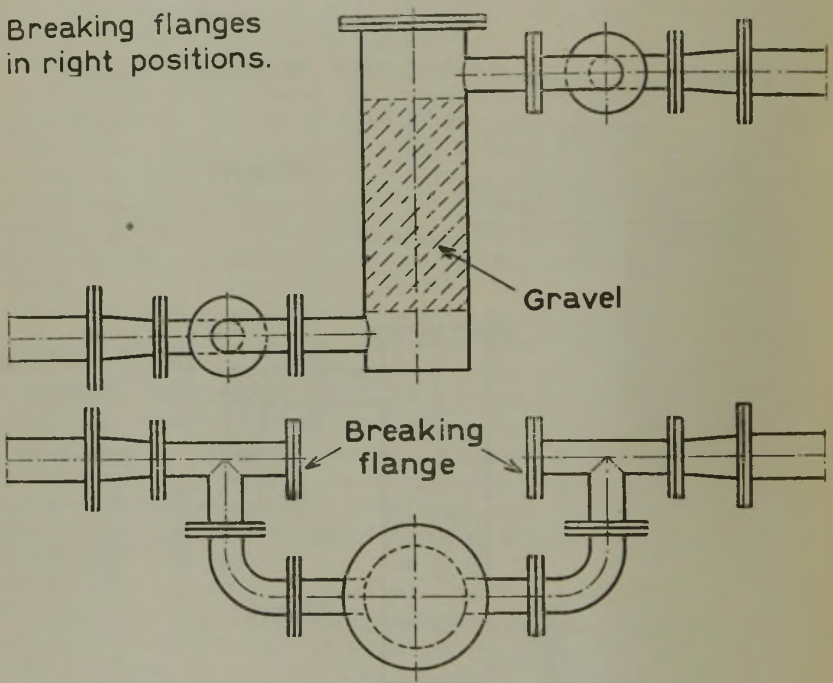

Fig. 3.

vapour lines between tanks, and tanks and gasometer, in vapour recovery systems. They are also used in low pressure fuel gas lines.

For the breaking flanges $\frac{1}{8}$-inch " Klingerit " sheet or a similar jointing material was found to be quite satisfactory if thoroughly coated with shellac on both sides to protect it from moisture. As to the resistance against flow, Figs. 5 and 6 show results obtained with tests with air, which may also be taken for hydrocarbon–air mixtures.

In the foregoing it has been shown how flame arrestors of the heat-dissipating type should be installed, in order effectively to prevent the spreading of explosions. It should finally be mentioned that there are other methods of extinguishing the burning gases, namely by contacting them with finely divided powdered substances which exercise an extinguish-

PLATE I.

PLATE II.

PLATE III.

[*To face p* 380.

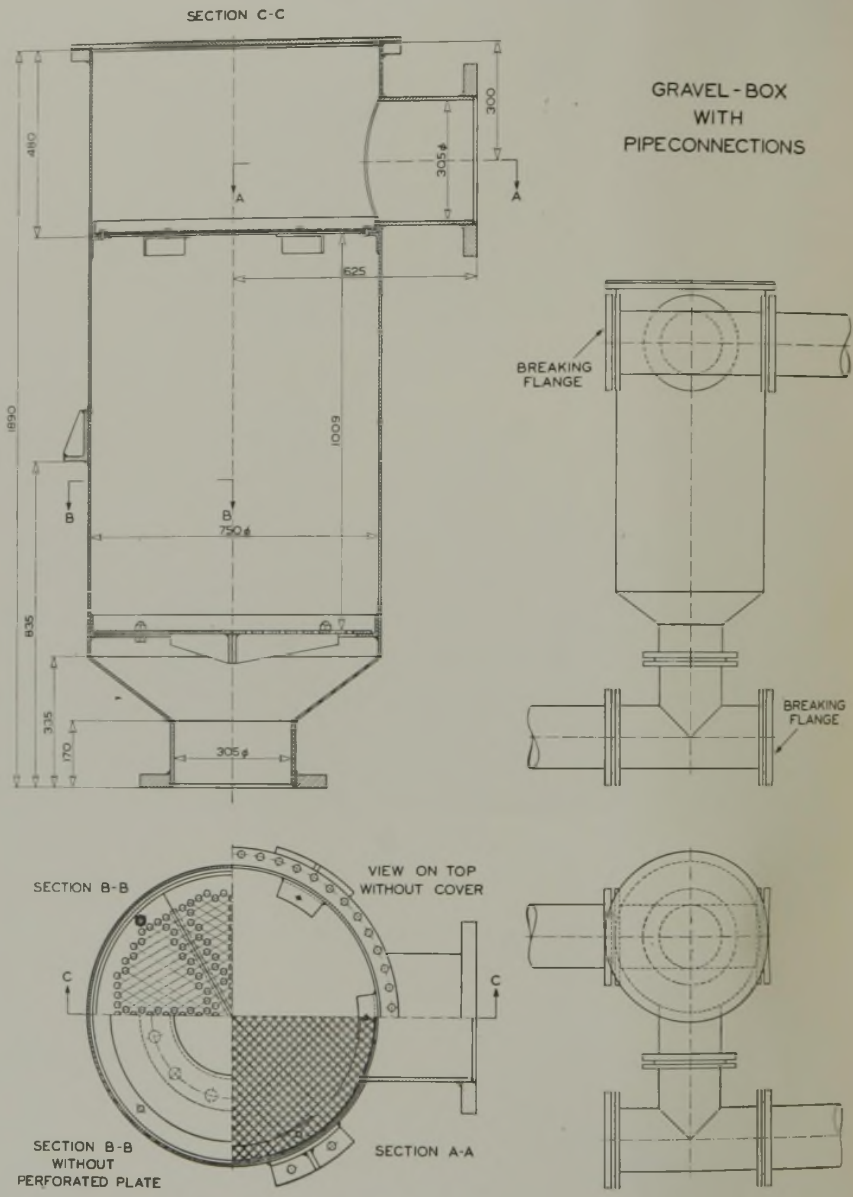
SECTION C-C
GRAVEL-BOX
WITH
PIPE CONNECTIONS
410
300
305ϕ
A
A
625
1890
1005
B
B
750ϕ
835
335
170
305ϕ
BREAKING
FLANGE
BREAKING
FLANGE
SECTION B-B
VIEW ON TOP
WITHOUT COVER
C
C
SECTION B-B
WITHOUT
PERFORATED PLATE
SECTION A-A

Fig. 4.

ing action. An example of such a substance is powdered potassium chloride. Several tests have been made with this method of explosion

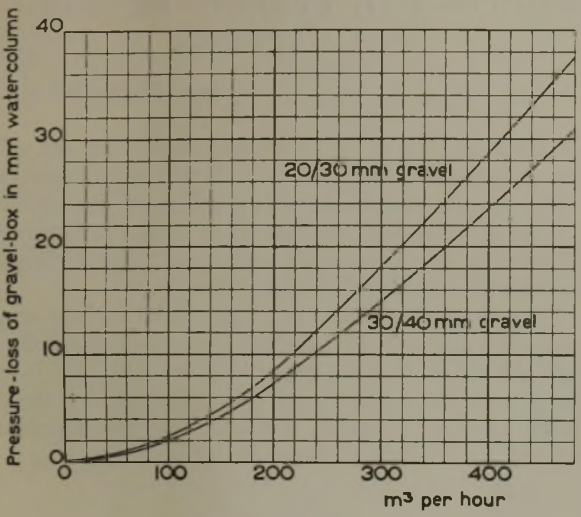

Dia. 500mm

FIG. 5.

RESISTANCE OF FLOW IN GRAVEL BOXES.

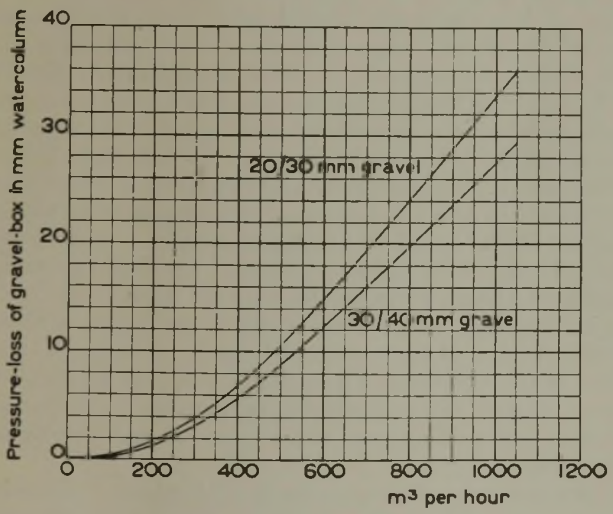

Dia. 750mm

FIG. 6.

RESISTANCE OF FLOW IN GRAVEL BOXES.

arresting, but so far the system has not appeared sufficiently suitable and reliable for the purpose in view.

THE PHYSIOLOGICAL EFFECTS OF TOXIC GASES AND VAPOURS.

By Wing-Commander T. McClurkin.*

In the first part of this paper the physiological effects of gases and vapours which are likely to be met with in the petroleum industry are considered. The second part deals with a group of other toxic gases and vapours. The list of gases and vapours covered by the two parts includes all those dealt with in Dr. Vallender's lecture on " The Detection of Toxic Gases and Vapours in Industry " (see p. 392).

Throughout the paper the effects of exposure to various concentrations of gases and vapours are stated ; they are from those given by Henderson and Haggard.[4] At the end of the paper is given a list of the works which have been consulted. Summaries of the literature on the toxicity of petroleum spirit, benzine, acetone, benzene, and the chlorinated hydrocarbons are to be found in the monograph by Browning.[1]

PART I.

Sulphuretted Hydrogen.

Sulphuretted hydrogen is an extremely poisonous gas—its toxicity and the rapidity of its action are classed with those of hydrocyanic acid. In addition to the severe systemic effects of acute poisoning, the gas has an irritant action on exposed mucous membranes. Henderson and Haggard [4] describe this local irritant action as being due to the combination of the sulphuretted hydrogen with the alkali present in the moist surfaces, such as those of the respiratory tract, to form sodium sulphide. The removal of the alkali from the tissues and the presence of the sulphide both set up irritation. In the lungs some of the sodium sulphide is absorbed and hydrolysed in the blood to hydrogen sulphide ; the oxygen present leads to its oxidation to harmless sulphate. Hydrogen sulphide which is not oxidized in the blood gives rise to systemic effects.

In cases of poisoning where irritant effects predominate the symptoms are those of irritation of the eyes and lungs. In the eyes there may be inflammation of the conjunctiva and the cornea. In the lungs the effects may be severe enough to cause œdema or pneumonia, and the occasional delayed deaths, one to four days after exposure, are due to the irritant effect on the lungs.

In acute poisoning the systemic effects predominate ; the poison acts on the nervous system. There may be sudden collapse, unconsciousness, and rapid respiratory failure. If the concentration is very high, the failure of respiration is due to paralysis of the respiratory centre. The inhalation of lower concentrations causes over-stimulation of the respiratory centre. and this may be followed by failure of respiration.

* Chemical Defence Research Department, Porton.

Henderson and Haggard [4] give the effects of various concentrations of sulphuretted hydrogen as follows :—

100–150 parts per million parts of air—slight symptoms after several hours;
500–700 parts per million—dangerous in 30 minutes to 1 hour;
1000–3000 parts per million—rapidly fatal.

Sulphur Dioxide.

This gas is so irritating to the eyes and upper respiratory passages that acute poisoning from the inhalation of high concentrations rarely arises. If rapid escape from such high concentrations is not possible, the irritant action may cause bronchitis, broncho-pneumonia, or even œdema of the lungs.

Repeated exposures to low concentrations are said to cause chronic inflammation and catarrh of the upper air passages.

According to Henderson and Haggard,[4] the maximum concentration allowable for short exposure ($\frac{1}{2}$–1 hour) is 50–100 parts per million parts of air, and a concentration of 400–500 parts per million is dangerous for even short exposure.

Chlorine.

Cases of acute poisoning by inhalation of chlorine gas are not frequent, as even in low concentrations it is very irritant to the respiratory passages and the eyes. Acute poisoning usually follows accidents in which large quantities of chlorine escape suddenly from cylinders or other containers. Short exposure to a concentration of 1000 parts per million produces a rapidly fatal result, and even short exposure to a concentration of 40–60 parts per million is dangerous.

After exposure to this gas conditions of all degrees of severity may be found, from a very slight irritation to such serious effects as broncho-pneumonia and lung œdema. Usually acute poisoning commences with irritation of the eyes, nose, and throat. Then follow violent and paroxysmal coughing with copious frothy expectoration, difficulty in breathing, pain in the chest, nausea, and vomiting. Death is caused by pulmonary inflammation and œdema. If death does not occur, bronchitis or pneumonia often supervenes.

Although evidence has been brought forward to show that repeated exposures to low concentrations of chlorine lead to acclimitization, various ill-effects of such repeated exposures have been described. Among these are chronic bronchitis, affections of the eyes and eyelids, chronic gastritis, headache, and sleeplessness.

Carbon Monoxide.

The danger from the inhalation of carbon monoxide lies in its power to combine with hæmoglobin to form a dissociable compound as oxygen does. The affinity of carbon monoxide for hæmoglobin is approximately 300 times that of oxygen. When air containing a small proportion of the gas is breathed, a partition of the hæmoglobin between oxygen and carbon monoxide occurs, the final partition being determined by the concentration

of carbon monoxide in the air breathed. The rate at which this final partition is reached depends on the volume of breathing. Physical exertion increases the volume of breathing, and with it the rate of absorption of carbon monoxide. As the hæmoglobin takes up carbon monoxide, so its oxygen-carrying power diminishes and symptoms due to lack of oxygen appear. These symptoms depend on the proportion of hæmoglobin which is in combination with carbon monoxide. When this is 10 per cent., the only symptom is shortness of breath on vigorous muscular exertion; at 30 per cent., the symptoms are headache, irritability, fatigue on exertion, and disturbance of judgment; at 50 per cent., confusion, collapse, and fainting on exertion; at 60–70 per cent., unconsciousness, respiratory failure, and death if long continued; at 80 per cent., the effects are rapidly fatal, and above this figure immediately fatal.

The effects of the inhalation of various concentrations of carbon monoxide are as follows: 400 parts per million, headache after 1–2 hours; 1600 parts per million, headache, dizziness, collapse, unconsciousness, and possibly death in 2 hours; 4000 parts per million, fatal in exposures of less than 1 hour.

Petroleum Spirit and Benzine.

This account of the effects of the inhalation of the vapours of petrol and benzine has been prepared from the review of the literature made by Browning.[1] This author directs attention to the confusion in the literature dealing with the physiological effects of the substances classed under the above names. In many cases petroleum spirit and benzine are regarded as one and the same substance; in others a specific distinction is made between them. To add to the confusion, many observers fail to give the exact constitution of the substance under investigation. These remarks apply both to the records of poisoning in man and those of experimental work with animals.

So far as acute poisoning in man is concerned, there appears to be little difference between the effects produced by other varieties of petroleum spirit and by benzine, and where variations in the symptoms of chronic poisoning are recorded, these seem to arise from the difference in constitution, especially with regard to admixtures of benzole and its homologues.

A description is first given of the effects recorded as due to the inhalation of petrol fumes, and this is followed by an account of those effects which have been ascribed specifically to benzine.

The cases recorded of acute poisoning with petroleum spirit have been due either to the swallowing of petrol or to the inhalation of high concentrations of the fumes. Poisoning by such inhalation has occurred on ships transporting petrol, during the use of paints and varnishes containing petrol, in the cleaning out of tanks used for storing petrol—many severe and fatal cases have occurred in men who have entered tanks containing petrol.

The symptoms in severe cases of acute poisoning are unconsciousness, delirium, cyanosis, shallow breathing, weak pulse and in some cases convulsions. Of twenty-seven cases of acute poisoning reported in England between 1921 and 1935, six were fatal.

Less severe cases of acute poisoning may show restlessness and mental excitement, rapid and incoherent speech, flushed face and rapid pulse;

others show depressive effects such as lassitude, somnolence and loss of consciousness; sickness and vomiting have also been reported.

Various sequelæ to acute poisoning have been described; among them are irritability and violent headache, disturbances of speech, cyanosis, gastro-intestinal disorders, loss of sensitivity, neuritis, conjunctivitis, bronchitis, and pneumonia.

The reports of chronic poisoning from the inhalation of petrol fumes are very indefinite. Such symptoms as headache, giddiness, neuralgia, lack of concentration, respiratory disorders, disturbances of sensibility, tremor of the eyelids, and other nervous disorders have been described as due to chronic poisoning. On the other hand, an investigation of the health of petrol-workers in the United States showed that chronic injury from the inhalation of petrol vapour was exceptional.

Benzine.

The variability in the effects ascribed to benzine is no doubt due to the fact that under the term benzine is included a group of substances covering a wide range of chemical constitution and properties.

The effect of benzine in man, whether the poisoning is acute or chronic, is essentially that of a nerve poison. While in chronic poisoning injury to the blood has been observed by some workers, the injury is not by any means so characteristic or invariable as in chronic benzole poisoning.

In acute poisoning the predominant symptoms are those of a narcotic poison with an added irritative effect. The usual progress of a fatal case, which as a rule occurs after exposure to a high concentration—*e.g.*, as a result of entering a tank filled with benzine vapour—is loss of consciousness, irregular respiration, cyanosis, coldness of the skin, muscular twitchings going on to convulsions, disappearance of reflexes, paralysis of bladder and rectum, and fatal coma with cardiac collapse. In non-fatal cases there may be a condition of intoxication with psychic disturbances, return of consciousness being accompanied by hysterical laughter and muscular twitching. Headache, dizziness, nausea, abdominal pain, blurred vision, cyanosis, disturbances of respiration, paralysis of legs, bladder, and rectum are other symptoms which have been observed in severe acute poisoning. In mild cases of benzine poisoning there is often a feeling of well-being accompanied by slight disturbances of sight and hearing.

Various sequelæ of acute poisoning have been described; they include nervous disturbances such as paralysis, inflammatory conditions in the lungs, anæmia, and albuminuria.

A concentration of 24,000–30,000 parts of benzine vapour per million is rapidly fatal, and one of 11,000–22,000 parts per million is dangerous for inhalation for a short period.

Symptoms of chronic benzine poisoning which have been recorded may be arranged under four headings:—

(*a*) Disturbance of general health—giddiness, weakness, spots before the eyes, insomnia, headache, asthma, loss of appetite, vomiting, etc.

(*b*) Irritation of mucous membranes—respiratory irritation and conjunctivitis.

(*c*) Nervous disturbances—apathy, mental confusion, difficulty of

speech, loss of memory, lack of concentration, loss of power in the hand, arm and leg, tremor, disordered sensation.

(*d*) Blood changes.—Some writers state that it is rare to find any variations in the blood picture, especially with those varieties of benzine which contain little or no benzole, but the results of several investigators appear to show that anæmia is the most constant change.

Acetone.

Reports of ill-effects in man from the inhalation of acetone vapour during its industrial use are rare, and in some cases inconclusive.

Experiments have shown that it is impossible to inhale concentrations of 8500 parts per million for longer than 5 minutes owing to acute irritation of the throat. According to Flury and Zernik,[2] longer inhalation of lower concentrations causes irritation of the upper respiratory passages and bronchi, headache, heaviness in the head, and they state that many workmen show individual susceptibility to its effects.

In animals, inhalation of acetone vapour produces narcosis, with irritative effects on the nervous system, such as twitchings and convulsions. Repeated exposures to low concentrations of acetone vapour show very few ill-effects in animals, only slight irritation of the eyes and nose.

Benzene.

Benzene vapour may cause either acute or chronic poisoning. Acute poisoning follows a single exposure to a high concentration, and chronic poisoning repeated exposure to low concentrations.

The symptoms in acute poisoning depend on the amount of benzene absorbed. Absorption of small amounts leads to a state of euphoria; this is rapidly followed by sleepiness, headache, giddiness, staggering gait, nausea, vomiting, and inability to escape from the poisonous atmosphere. Inhalation of larger amounts leads to convulsive movements, paralysis, and unconsciousness. In the most serious cases death occurs suddenly in convulsions or in coma. Air containing 20,000 parts of benzene per million can kill in 5–10 minutes, and an exposure of several hours to a concentration of 1500–3000 parts per million will cause slight symptoms.

The onset of chronic poisoning by benzene manifests itself by headache, tiredness, loss of appetite, giddiness, nausea, vomiting, pallor, and anæmia. It is usually the occurrence of hæmorrhages which indicates that the condition is due to benzene poisoning; there may be bleeding from the nose and gums, hæmorrhages below the skin and conjunctivæ, hæmorrhages into the lungs leading to the coughing of blood, or hæmorrhages into the stomach leading to the vomiting of blood.

Examination of the blood shows that there are changes in its cell content. These changes may vary from case to case, but the typical picture is a decrease in the number of white cells and an alteration in the proportion of the types of white cells; there is also usually a reduction in the red cells. In addition to the effects already mentioned, there may be others related to the nervous system, such as neuritis and paralysis.

In England during the period 1919–1928, 144 cases of chronic benzene poisoning with ten deaths were reported.

Mercaptan Vapours.

Flury and Zernik [2] refer to the effects of ethyl mercaptan and perchlormethyl mercaptan. The former has caused the following symptoms in man: vomiting, diarrhœa, transitory albuminuria with casts and blood in the urine—followed by recovery. The effects of inhalation of perchlormethyl mercaptan are irritation of the eyes, throat and nose, general sickness, and vomiting.

Furfuraldehyde.

There is no record of poisoning in man by this compound. On inhalation it is irritant to the mucous membrane of the upper air passages. Convulsive seizures and paralysis have been caused in animals by the injection of this substance.

Phenol.

It is stated in "Occupation and Health" [6] (1934) that systemic poisoning which has followed extensive splashing of the skin by this compound has also followed inhalation of the fumes. The symptoms in severe cases are: loss of consciousness, muscular spasms, convulsions, and death from respiratory paralysis. In less severe cases the symptoms are giddiness, drumming in the ears, headache, fainting, mental confusion, difficulty in breathing, weak pulse, excitement, and delirium; these cases may terminate in paralysis and death. It is also stated that inhalation of the fumes may cause local irritant effects in the respiratory passages and eyes.

Other authorities point out that systemic poisoning is almost unknown in industry, and that the compound is not sufficiently volatile under ordinary conditions to cause poisoning from the inhalation of the vapours.

Cresylic Acid.

No ill-effects from the inhalation of the vapour of cresylic acid have been reported.

PART II.

Phosgene.

Phosgene is one of the most dangerous of poison gases, and was therefore used on a large scale during the War. Its toxic qualities are due to its irritant effects on the lungs, which overshadow any accompanying irritant effects on the eyes. Although it is irritant to the upper air passages, its most severe effects are in the small air-sacs and small bronchial tubes of the lungs. The irritation caused by the gas leads to marked congestion of the lungs and the outpouring of fluid into the small air-sacs or alveoli and the bronchial tubes with which they communicate. This outpouring of fluid—acute pulmonary œdema—if widespread, causes death by asphyxiation. Air cannot reach those surfaces in the lungs at which the normal interchange of gases between the air and the blood takes place, and the patient is in fact drowned by the exudate into his lungs.

The symptoms produced by exposure to phosgene are those which would be expected from its mode of action. There is immediate irritation of the

respiratory passages and eyes. The irritation of the respiratory passages causes coughing and a feeling of tightness and pain in the chest. The breathing becomes gasping and interrupted by violet fits of coughing. Nausea, vomiting, headache, and a feeling of fatigue may accompany the early stages of poisoning. As œdema develops in the lungs the breathing becomes shallow, rapid, and panting. Expectoration may be profuse. The face becomes blue. As well as these effects of irritation and lack of oxygen, the œdema obstructs the normal flow of blood through the lungs, and thus puts a severe strain on the heart. Collapse and death may follow. The condition of lung œdema is at its worst 12–24 hours after exposure. If death does not occur, the fluid is rapidly absorbed from 48 hours onwards after exposure.

Some cases of acute phosgene poisoning have a more insidious onset. The preliminary symptoms of irritation are slight, and little attention may be paid to them, then, several hours later, the person affected may become severely ill with acute œdema of the lungs and collapse. In all cases of poisoning by phosgene or other lung irritants which may cause lung œdema it is essential that from the beginning the person who has been exposed should have absolute rest and quiet. Any exertion increases the demand for oxygen and puts an additional strain on the heart. Such exertion may cause a rapidly fatal result.

A concentration of 25 parts of phosgene per million parts of air is dangerous for even short exposure; higher concentrations have a rapidly fatal effect.

Nitrous Fumes.

The effects of the inhalation of nitrous fumes are very similar to those of phosgene. The striking feature is the insidious nature of the poisoning. The symptoms at the time of exposure are slight irritation in the nose and throat, with irritating cough and pain in the chest. These initial symptoms pass off rapidly, and there is a latent period in which the gassed person feels quite well again. The latent period lasts several hours, and is then followed by the signs of acute congestion and œdema of the lungs: these have been described in the section on phosgene poisoning.

Effects of concentrations of nitrous fumes expressed as parts of NO_2 per million parts of air :—

117–154 p.p.m.—dangerous for even short exposure.
240–275 p.p.m.—rapidly fatal for short exposure.

Arseniuretted Hydrogen.

This gas causes a severe form of poisoning as a result of its action on the red blood corpuscles. On inhalation it is absorbed and taken up by the hæmoglobin, forming a compound with this substance. The arsenic in this combination is gradually oxidized to arsenic oxide, and the breaking down of the corpuscles proceeds with the formation of arsenic oxide.

The symptoms of acute arsine poisoning are due to the breaking down of the red corpuscles and the excretion of the products of this cell destruction. Some time elapses before the effects of this destruction are evident; it may be as short as 6 hours or it may be 36 hours or more. The early symptoms are a feeling of weakness with dizziness and faintness. There

may be severe headache with nausea and vomiting. Blood or blood pigments appear in the urine. In 24–48 hours jaundice appears, and the number of red blood corpuscles may fall to one fifth of their normal number. Death from acute arsine poisoning takes place in 2–6 days, and is usually preceded by suppression of urine.

A concentration of 250 parts of arsine per million with an exposure of 30 minutes will cause fatal results, and an exposure of 1 hour to 50 parts per million is dangerous. During the period 1896–1931 in this country eighty-six cases of arsine poisoning were reported; of these twenty-one were fatal.

Hydrogen Cyanide.

Hydrogen cyanide when inhaled in a poisonous concentration inhibits the vital respiratory function of the cells of the body with which it comes in contact. In high concentrations it causes death with dramatic rapidity. The symptoms follow in rapid sequence: giddiness, confusion, headache, pain over the heart, unconsciousness, difficult breathing, convulsions, and death. Still higher concentrations cause immediate unconsciousness, a few gasping respirations, and death with or without convulsions.

A concentration of 300 parts per million has a rapidly fatal effect, and one of 120 parts per million is dangerous for an exposure of ½–1 hour.

Hydrogen cyanide can be absorbed by the skin, and toxic effects may follow such absorption.

Carbon Bisulphide.

Inhalation of a high concentration of carbon bisulphide fumes causes an acute form of poisoning—a narcotic condition similar to that caused by chloroform. The symptoms are loss of consciousness, delirium, dilated pupils, loss of reflexes, complete paralysis in the severest cases, and respiratory failure leading to death. Slighter cases of acute poisoning are characterized by headache, giddiness, breathlessness, vomiting, palpitation, etc. These symptoms may subside rapidly after removal from exposure, or some may persist for several weeks or months after the acute attack.

Repeated exposures to lower concentrations cause a chronic form of poisoning which may be mild or severe. The mild type is characterized by weakness, fatigue, giddiness, headache, difficulty in concentration, loss of memory, insomnia, numbness and tingling in the limbs, nausea, vomiting, and loss of appetite.

Severe cases of chronic poisoning may show various serious disturbances of the nervous system, such as delirium, hallucinations, mania, neuritis, tremors, loss of power, loss of sensation, and failure of vision. There may also be gastric disturbances and anæmia.

Henderson and Haggard [4] state that slight symptoms are produced by a single exposure of several hours to a concentration of 350 parts per million, and that a concentration of 1150 parts per million is dangerous for an exposure of ½–1 hour. These concentrations refer to the causation of acute effects from a single exposure; repeated exposures to lower concentrations cause chronic poisoning.

Aniline.

The earliest symptom in acute aniline poisoning is cyanosis shown by a bluish-grey colour of the lips, the nails, and the skin, particularly that of

the ears, the cheeks, and the tip of the nose. This cyanosis is the result of the action of aniline after its absorption into the blood. The oxyhæmoglobin is changed to methæmoglobin, and this change interferes with the transport of oxygen to the tissues. Other symptoms are severe headache, dizziness, weakness, and shortness of breath. The nervous system may be affected; there may be a condition of excitement, a feeling of numbness in the extremities and, in severe cases, loss of consciousness and convulsions. Aniline poisoning may follow inhalation of the vapour, but absorption of the substance by the skin takes place easily, and such absorption is followed by toxic effects.

An exposure of several hours to 7–26 parts of aniline per million parts of air will cause slight symptoms.

Repeated exposure to low concentrations of aniline vapour causes chronic poisoning with anæmia, cyanosis, headaches, general weakness, and digestive disturbances.

Organic Halides.

The seven compounds which are to be considered are all narcotics.

Dichlorethylene.—Only one acute and fatal case following inhalation during its use in an industrial process has been recorded. There is no definite evidence that chronic effects are produced.

Trichlorethylene.—The chief danger of this substance is acute narcosis from prolonged exposure to a high concentration. During the period 1921–1935 in England, thirty-nine cases of gassing by trichlorethylene were reported; of these three were fatal; in each case death was preceded by unconsciousness. In England little or no evidence has been found of a cumulative effect as a result of repeated exposure to low concentrations.

Dichlorethane.—One case of acute but not severe effects from the inhalation of the vapour has been reported in England. The symptoms were vomiting, diarrhœa, giddiness, and drowsiness. No chronic effects have been reported.

Tetrachlorethane.—This compound is one of the most toxic of the chlorinated hydrocarbons, exerting not only a narcotic effect, but producing severe injury in the body, especially atrophy of the liver. Acute poisoning in the form of narcosis leading rapidly to death has not been reported from the inhalation of tetrachlorethane. In chronic poisoning the period of exposure to the vapour which produces effects may be relatively short, and the course of the poisoning after the onset of severe symptoms may be very rapid. The early symptoms are fatigue, loss of appetite, abdominal pain, and rapidly developing jaundice; these are followed by vomiting, albuminuria, swelling of the legs, somnolence, delirium, convulsions, and coma, leading usually to death. In a review of poisoning by this substance, out of a total of 124 cases twenty-five were fatal.

Pentachlorethane.—This compound is a very powerful narcotic. No toxic effects in man have been reported.

Carbon Tetrachloride.—Rapidly fatal effects in man due to the acute narcotic effect of the fumes are comparatively rare; but many cases have been recorded in which death has taken place at an interval of 3–12 days

after severe exposure. The most common symptoms are gastro-intestinal disturbances, nausea, vomiting, diarrhœa, tenderness over the liver, jaundice; in many cases the kidneys are seriously affected. These symptoms are frequently accompanied by headache and fatigue. Late symptoms are convulsions, cyanosis, and difficult breathing. A concentration of 24,000–32,000 parts per million is dangerous for an exposure of 30 minutes to 1 hour and 48,000–63,000 parts per million is rapidly fatal for short exposure.

Chronic poisoning by carbon tetrachloride is characterized by gastro-intestinal disturbance and jaundice. Typical symptoms are nausea, vomiting, and constipation associated frequently with weakness, fatigue, and headache. Various visual disturbances—spots before the eyes, blurring of vision—have also been reported.

Monochlorbenzene.—This substance is a narcotic, producing effects like those of benzene. Opinion is divided as to whether it is less or more toxic than benzene. The symptoms produced in a case of poisoning following the accidental swallowing of this substance were: sudden unconsciousness two hours after ingestion, pallor, cyanosis of the lips, loss of reflexes, and twitching of the facial muscles; unconsciousness lasted for 3 hours. The records of effects from inhalation in industry are indefinite.

Table showing the Toxicity of Various Gases and Vapours.

From Flury and Zernik [2] and Leschke [5].

Substance.	Fatal with 5–10 minutes exposure. p.p.m.	Dangerous (toxic). ½–1 hour exposure. p.p.m.	Endurable. ½–1 hr. exposure. p.p.m.
Phosgene	50	25	1
Chlorine	500	50	5
Arsine	300	60	20
Hydrogen cyanide	200	100	50
Nitrous fumes	500	100	50
Hydrogen sulphide	800	400	200
Carbon bisulphide	2,000	1,000	500
Sulphur dioxide	3,000	400	100
Carbon monoxide	5,000	2,000	1,000
Benzene	20,000	7,500	3,000
Petrol (benzine)	30,000	20,000	15,000
Carbon tetrachloride	50,000	25,000	10,000

List of Works dealing with the Toxicity of Gases and Vapours.

[1] Browning, E. (1937), Medical Research Council, Industrial Health Research Board, Rep. 80, London.
[2] Flury, F., and Zernik, F. (1931), "Schädliche Gase und Dampfe," Julius Springer, Berlin.
[3] Hamilton, A. (1934), "Industrial Toxicology," Harper, New York.
[4] Henderson, Y., and Haggard, H. W. (1927), "Noxious Gases," New York.
[5] Leschke, E. (1934), "Clinical Toxicology," Churchill, London.
[6] "Occupation and Health" (1930 and 1934), International Labour Office, Geneva.

THE DETECTION OF TOXIC GASES IN INDUSTRY.

By R. B. Vallender, B.Sc., Ph.D., A.I.C.*

The papers which have been discussed to-day have dealt mainly with the dangers of fire and explosion arising from the presence in the atmosphere of combustible gases and vapours. In my talk to you this evening I shall consider industrial gases from another point of view—namely, their effects on the health of the workers. Wing-Commander McClurkin in his paper gave an account of the serious effects that may be caused by breathing even very small quantities of the various gases; I shall deal with the problem of how to determine whether or not an atmosphere is free from dangers of this type.

The importance of this particular branch of industrial hygiene cannot be over-estimated, yet it is one which, in the past, has received far too little attention. Much work has been done in re-designing plant, so that the gases or vapours evolved in the various processes are, as far as possible, prevented from escaping into the atmosphere—methods of ventilation have been greatly improved—regulations have been drawn up regarding the emptying of stills, tanks, etc., before men are allowed to enter for cleaning or repair work. But, even with the best-designed plant and the most carefully drawn up regulations, it is impossible to ensure that the atmosphere to which the worker is exposed will not at any time be such as to jeopardize his health or his safety. Yet, except in isolated instances, little attention has until recently been paid to the development of suitable methods of testing the atmosphere for the presence of traces of undesirable constituents. The result is that we frequently hear of cases of men entering closed vessels which were thought to have been thoroughly cleaned out and to be free from toxic material, and collapsing from the effects of fumes, often with fatal results. Or, again, there are numerous cases on record of the health of a worker, who had been engaged on a particular process for perhaps several years, gradually deteriorating, until he is no longer able to carry on his work, due entirely to the atmosphere he has been breathing in his daily occupation. The occurrence of such cases could probably in most instances have been prevented if only adequate tests had been made of the atmosphere which the worker had to breathe, and the necessary steps taken to remove, or at any rate to reduce to a harmless amount, any injurious constituents that were detected.

The extent to which the gassing problem is met with in every branch of industry is perhaps not fully realized. Practically all the gases and vapours which may be encountered in industrial undertakings are potentially injurious to health, and there are few industries which do not have to contend with one or more of these gases. You in the petroleum industry, for example, are concerned with sulphur dioxide, hydrogen sulphide, and chlorine in the various processes involved in the refining of crude petroleum. In the artificial silk industry both hydrogen sulphide and carbon disulphide are a source of danger, particularly in the centrifuging and spinning of the viscose. Hydrogen sulphide is also frequently encountered in sewers and

* Chemical Defence Research Department, Porton.

other confined spaces where the decomposition of organic matter has taken place.

Aniline is used to a considerable extent in the textile and dyeing industries, and though not a very volatile liquid, can give rise to harmful concentrations of vapour in certain processes.

Sulphur dioxide and nitrous fumes are given off in the manufacture of sulphuric acid by the chamber process.

Chlorine is used for bleaching in the textile and paper industries, and may also be encountered in the tin-plating and dyeing industries.

Arsine is liable to occur in any processes involving the action of sulphuric or hydrochloric acids on metals. Both the metals and the acids are frequently contaminated with arsenic compounds, with the result that arsine is formed by reduction of these by the nascent hydrogen arising from the action of the acid on the metal. Smelting works, tinplate works, and galvanizing works are the usual sources of cases of this type.

Chlorinated hydrocarbons are largely used in dry-cleaning processes and as solvents in various other industries. A further source of danger from compounds of this type is in the use of fire-extinguishers of certain makes. Carbon tetrachloride and methyl bromide are most frequently used in these, both of them liquids with a toxic and narcotic action, methyl bromide being particularly poisonous. If used to put out a fire in a small room without efficient ventilation, dangerous concentrations of the vapours may easily be set up, in which men may unsuspectingly continue to work until they are overcome. Danger may also arise from the decomposition of such liquids by the heat of the fire; bromine and hydrogen bromide may be formed from bromine-containing substances, whilst extinguishers filled with carbon tetrachloride may give rise to phosgene.

Fumigation by means of hydrogen cyanide or sulphur dioxide, of ships, buildings, and commodities such as grain and cotton, in order to destroy rats, mice, and insect pests, has produced many fatal cases of gassing, through men entering the buildings before the gas has completely cleared away. A very interesting paper has just been published dealing with the fumigation of houses by hydrogen cyanide in which it is shown that under certain conditions undesirable concentrations of the gas may persist for 50 or 60 hours after fumigation.[1]

These are only a few examples of the ways in which gases can occur in various industries, but they will serve to demonstrate how widespread is the gassing danger.

The dangers arising from the various gases and vapours may be roughly divided into two classes:

(1) The immediate danger arising from a single exposure of not more than a few hours to comparatively high concentrations of a gas.

(2) The insidious, but none the less serious danger which may arise from repeated exposures, extending perhaps over a period of months or years, to very low concentrations of certain gases and vapours.

The dangers of class 1 are fairly well known; it is recognized, for example, that exposure to a high concentration of hydrocyanic acid, sulphur dioxide, or carbon monoxide is liable to be fraught with very unpleasant con-

sequences. It is, perhaps, not so generally realized, however, what very low concentrations of some of the gases are sufficient, even after a single exposure of not more than an hour or so, to produce undesirable symptoms. Let me give you a few examples.

Hydrogen sulphide is usually regarded as a harmless and rather amusing sort of gas, probably because one has since one's schooldays been used to the smell of it, which is readily perceptible in quite innocuous concentrations. You have heard already to-day, however, of the very undesirable effects which may be caused by only 1 part of this gas in 5000, 10,000, or even 20,000 parts of air. Hydrocyanic acid is usually thought of as a deadly poison; yet it is little more toxic than hydrogen sulphide, 1 part in 10,000 being stated to be dangerous in less than 1 hour, while 1 part in 50,000 produces only slight symptoms after several hours.[2]

Phosgene is dangerous to life in a concentration as low as 1 part in 500,000 of air, if the exposure lasts several hours, whilst 1 part in 200,000 may be fatal after only 30 minutes exposure.[3]

In the case of nitrous fumes, concentrations higher than 1 part in 25,000 may be dangerous for lengthy exposures,[4] the danger here being particularly great because of the insidious character of the poisoning. Concentrations of this order are quite unnoticed by smell or any other physical sensation, and even in cases which subsequently prove fatal, no symptoms may develop until several hours after the exposure.

Concentrations of the order of those I have quoted may easily be produced in the atmosphere to which men are exposed in the ordinary course of their work, quite apart from accidental occurrences such as the breaking of feed-pipes, etc. One of the main sources of danger is in the cleaning out or repair of stills, tanks, and closed vessels generally, which have contained toxic materials. This is a very frequent necessity in most industries, and in this particular case the Home Office have, as you know, drawn up regulations to the effect that no man must enter such a closed vessel or space until it has been thoroughly cleaned out and certified to be free from danger (Factory Form 814). But experience has shown that this is not sufficient. Even if the cleaning process has been sufficiently thorough (and this is not always the case), and the vessel is actually free from dangerous fumes when the men are allowed to enter, unsuspected dangers may arise during the repairing or cleaning process which the men are undertaking, and they may be suddenly overcome by gas and be unable to summon help from outside. For example, there is a case on record in which men entered a tank-wagon, which had been used for transporting crude benzole, in order to remove deposits. The tank had previously been steamed out continuously for three days, and was naturally thought to be quite free from danger. Yet on the second day of the work the men were overcome by benzole fumes, one of them with fatal results. It was evident that a certain amount of benzole had been trapped in the deposit in the tank, and that when this was disturbed by the men the liquid evaporated, and set up a dangerous concentration of the vapour.[5]

Sulphuric acid tanks have also frequently been the cause of gassing fatalities. In most cases the tank had been drained and left open to the atmosphere, and was apparently free from any gases; men have then entered it to remove the sludge deposited from the acid, and after working

for a time have collapsed from the effects of arsine poisoning. You will remember that I mentioned just now that arsine could occur when acids reacted with metals. It is supposed in the case of the acid tanks that the sludge contains some sulphuric acid, the top layer of which becomes diluted by taking up moisture from the air. In this condition it is capable of attacking the metal of the tank (the strong acid of course having no action), and as soon as the sludge is disturbed, it proceeds to do so. If the tank metal or the acid should happen to contain traces of arsenic compounds, these are reduced by the hydrogen generated, and arsine is formed. Of recent years also cases have occurred of gassing from hydrogen sulphide in acid tanks, and on investigation concentrations of this gas as high as 1 part in 3000 have been found to be present. The presence of hydrogen sulphide in these tanks has been shown to be due to the diluted acid attacking steel which contains ferrous sulphide.[6]

It will, I think, be very clear from examples such as I have given you that whenever men are working in an enclosed space, where there is any possibility whatever of the presence or formation of dangerous fumes—or indeed when any industrial process is being carried out which might give rise to such fumes—it is essential that the safety of the worker should be protected by carrying out frequent tests during the progress of the work to detect the presence of such fumes.

Before considering how this is to be done, let us turn for a few moments to the second type of danger, which, as I mentioned just now, may arise from the presence of gases in the atmosphere—namely, the slow undermining of the worker's health, or so-called chronic poisoning, which may be brought about by repeated exposures extending over a period of months or years to minute traces of gases or vapours. Wing-Commander McClurkin has given details in his paper of the serious effects which may be brought about in this way, particularly by some organic vapours. Many of these are capable of bringing on serious illness after frequent exposures to concentrations far below those producing immediate effects on a single exposure. Carbon tetrachloride, for example, is usually regarded as a fairly harmless vapour for a single exposure, a concentration of 1 part in 700 being regarded as safe for several hours[7]; it has, however, been shown that if men are exposed to the vapour daily for considerable periods, the concentration in the atmosphere should not exceed 1 part in 10,000.[8] Carbon disulphide is unlikely to produce any serious effects below a concentration of 1 part in 3000 in the case of an isolated exposure,[2] but recent work has indicated the necessity of keeping the concentration of this vapour in the atmosphere of workrooms, etc., below 1 part in 100,000.[9] There are many cases on record of chronic poisoning from carbon disulphide, particularly in workers in the spinning-rooms of viscose artificial silk works, where, unless the rooms are very well ventilated, the concentration may easily be above this figure. Benzene, similarly, though comparatively harmless for a single exposure, can, when inhaled in small insignificant amounts over long periods, have a very serious effect on the health, causing a type of anæmia which may prove fatal. There are several cases on record of chronic benzene poisoning, the period of repeated exposure to the vapour before the effects became apparent varying from a few months to, in one case, 38 years.

The appearance of any symptoms of chronic poisoning are as a rule so

long delayed, or the effects are at first so slight, and apparently nothing more than ordinary indisposition, that it is usually very difficult to convince people that any danger exists, especially since the concentrations concerned are usually well below those which can be detected by smell or other physical sensation. It is admittedly hard to believe that an apparently pure atmosphere in which one has been working perhaps for several months without any sign of discomfort may presently bring on a serious illness. Nevertheless, experience has all too frequently shown that this is so, and it has become increasingly clear that the atmosphere of workrooms, etc., where there is any possibility of the presence of gases and vapours which can produce chronic effects, should be subjected to regular tests. Even if, as may well be the case, the amount of injurious vapour is not sufficient eventually to bring on any serious illness, but is so low that it produces in the workers nothing more than frequent slight headaches or indisposition, it is obvious that they cannot give of their best under these conditions. It is to the employer's interest too, therefore, that such a state of affairs should not exist, and it is only by carrying out regular tests of the atmosphere that it can be avoided.

Let us consider now the question of how these very necessary tests of the atmospheres to which workers are exposed in their daily occupations are to be carried out.

The use of white mice has been suggested as a means of detecting dangerous concentrations of gases which may arise during the cleaning out and repair of tanks and other closed vessels.[10] This method is useful, but has its limitations, and in certain circumstances may give the workers a false sense of security, for it implies that, whatever gas or vapour may be present, as long as the mouse remains alive and well, the men also will experience no harmful effects. While this is true for carbon monoxide and hydrogen cyanide, the mouse being more susceptible to these gases than man, in a number of other gases and vapours the reverse applies. In certain gases too—*e.g.* nitrous fumes—the onset of symptoms of poisoning may be delayed for several hours after exposure, and the mouse thus gives no warning at the time of the presence of dangerous concentrations of the gas.

It has sometimes been suggested that since most of the dangerous gases and vapours have a characteristic odour, even in very low concentrations, the worker's sense of smell will usually give adequate warning of danger. Let me point out most emphatically, however, that reliance on one's sense of smell is in most cases a highly dangerous procedure. In the first place, some gases can produce harmful effects in concentrations lower than those detectable by smell, particularly where there is a possibility of chronic poisoning. Secondly, the sense of smell varies considerably amongst individuals, and concentrations which are quite obvious to one man might be unnoticed by another. There are a number of people, for instance, who have never been able to smell hydrocyanic acid, whilst others can detect the least trace in the atmosphere. Then again, even in the case of a gas which has a strong odour in harmless concentrations, one's sense of smell becomes fatigued after exposure to these concentrations for some time, and it is quite possible that a sudden rise in the concentration to a dangerous figure

would not be detected. In the case of hydrogen sulphide, in fact, concentrations higher than about 1 part in 10,000 cannot be smelt at all, the gas having the power of temporarily paralysing the olfactory nerve.[6]

It is evident, then, that both the sense of smell and the behaviour of animals though being of some value in certain circumstances, are not suitable as general methods for detecting concentrations of gases to which it would be dangerous to be exposed. The only safe method is to find suitable means—either physical or chemical—of determining approximately the actual concentrations of the various gases which are present. By comparing the results with what data are available regarding the physiological effects of various concentrations of the particular gas, the safety or otherwise of the atmosphere can then be assessed.

What are the requirements of such methods? In the first place a test must be capable of estimating with reasonable accuracy concentrations of a gas varying from the lowest which can produce harmful effects, either immediately or on repeated exposure, to those which would immediately be fatal. That is to say, in some cases it must be sensitive to as little as 1 part in 1,000,000.

Secondly, it should be rapid in application and capable of giving immediately, or within a very short time, an indication of the amount of gas present. For example, in the case of men working in tanks, etc., where rapid and unexpected increases in the amount of gas present are possible and frequent tests of the atmosphere are being carried out, it is essential that the results of the tests should be available sufficiently quickly to give the men due warning of any dangers which may have arisen. For this reason, too, the tests should preferably be simple in operation, and should require little or no specialized knowledge in carrying them out, in order that they can be performed by the workers themselves or by responsible officials, foremen, etc. The apparatus required, also, should be robust and portable, so that tests can easily be carried out in any position in which a man is working.

These last three conditions are, of course, not so important in the case of regular routine tests of the atmosphere of workrooms, where the general health of the workers is concerned, rather than their immediate safety. In such cases a better average figure would, in fact, be obtained by sampling the atmosphere over a comparatively long period, whilst the result of the test is not necessarily required immediately. Such tests could be carried out by laboratory personnel as part of their daily routine. It is, however, obviously preferable that even in this case, whatever test is used, the same test should also be capable of being employed to detect an immediate danger.

In addition to the requirements I have mentioned, it is very desirable that the apparatus or materials required for the tests should be comparatively cheap and possibly applicable to a number of gases, so that even the smallest firms would be encouraged to make use of them.

Let us now examine the various methods which can be used for the estimation of gases, and see to what extent they can be, or have been adapted to satisfy these requirements, and so made suitable for industrial use.

Most of the existing methods of gas analysis or detection fall into three classes :—

(1) Physical or physico-chemical methods.
(2) Adaptations of the ordinary methods of chemical analysis—volumetric analysis, etc.
(3) Colorimetric or nephelometric methods.

Physical Methods.

A number of instruments have been devised based on various physical properties of gases and vapours. Several of these are based on the effect of combustion of a gas, the heat of combustion being recorded in various ways and used as a measure of the concentration of gas present. In one type of detector, for instance, any traces of combustible gas present are burned on a heated platinum filament, the heat generated causing an increase in the resistance of the wire, which is measured by means of a milliammeter. The M.S.A. Combustible Gas Indicator and the Siemens-Halske detector are examples of this type. In the Spiralarm Detector, which resembles a miner's safety-lamp, a small flame is kept burning which maintains a metallic spiral at a certain temperature. Any traces of combustible gas present increase the heat of the flame, causing the spiral to twist until an electrical contact is made which lights a warning lamp. This can be made to take place at any predetermined concentration of a given gas. In another instrument—the Thornton Detector—the increase in the brightness of a heated filament when small amounts of a gas are burnt on it is used as a measure of the concentration present.

The main value of detectors of this type is, however, for the detection of explosive concentrations of inflammable gases and vapours, and they are largely used for this purpose in mines and in the petroleum industry. Probably most of you are familiar with some of them in this connection. Since the lowest concentrations of a gas or vapour which constitute an explosive atmosphere are very considerably higher than those which produce symptoms of poisoning, such detectors are usually too insensitive to be used for detecting harmful concentrations. They have the disadvantage also of not being specific for any particular gas or vapour, and of requiring a separate calibration for each gas. Consequently, in an atmosphere containing two or more gases, little more than a qualitative indication of their presence might be given.

The difference in the rate of diffusion of gases has been used as a means of estimation. If a porous-walled chamber full of pure air is introduced into an atmosphere containing a gas, the air inside the chamber will diffuse out at a different rate from that at which the gaseous atmosphere diffuses into the chamber, owing to the difference in the densities of the gases, the rate of diffusion being, as you know, inversely proportional to the square of the density. In this way a difference of pressure will be set up between the inside and outside of the chamber, which for a given gas is proportional to the concentration present. This difference can be recorded either on a manometer, or by means of a sensitive diaphragm and a pointer, similar to that of an aneroid barometer. These detectors also, however, are too insensitive for the detection of toxic concentrations of gases, and would be

useful only for detecting explosive concentrations of inflammable gases or for locating the source of leak of gas from plant.

A detector based on physico-chemical properties which has under certain conditions proved of considerable value in detecting toxic atmospheres is the Katz carbon monoxide recorder. In this instrument air is passed continuously through a container filled with hopcalite—a mixture of metallic oxides, which has the property of catalytically oxidizing any traces of carbon monoxide to the dioxide. In this oxidation heat is evolved, which is recorded electrically by means of thermo-couples embedded in the catalyst, the current produced being proportional to the concentration of carbon monoxide present. This current may be directly measured on a milli-ammeter or continuously recorded on a rotating drum; or it can also be arranged to ring an alarm bell if the concentration reaches a dangerous value. The detector is sensitive to a concentration of at least 1 part in 10,000; concentrations lower than this are unlikely to produce any harmful effects unless exposure is very prolonged. Although this type of instrument has proved valuable as a permanent installation—for example, in the Mersey Tunnel—it is not altogether suitable for general use in industry, owing to its expense and to its weight and bulk, although there is now a portable form of it on the market.

A number of other principles have been employed for estimating gases—for example, those of the interferometer, and of the difference in the degree of ionisation of gases—with which I have no time to deal; on the whole, however, except possibly in the case of carbon monoxide, purely physical or physico-chemical methods are, for various reasons, of little value for testing the atmosphere for injurious constitutents.

Chemical Methods.

Let us turn now to chemical methods of estimation. In the first place, to what extent can the ordinary methods of chemical analysis be used? Most of the gases and vapours with which we are concerned can be estimated by simple volumetric analysis, provided that there is sufficient of the gas present to require a reasonable volume of the reagent. For instance, sulphur dioxide can be absorbed in alkali, the solution acidified and titrated with standard iodine—chlorine can be made to liberate iodine from potassium iodide, and the iodine titrated with thiosulphate—aniline vapour can be absorbed in acid and titrated with bromine solution—and so on. Although methods of this type usually require a considerable amount of apparatus, in a few cases portable instruments have been designed for testing the atmosphere, based on volumetric analysis. For example, the Willson chlorinated hydrocarbon apparatus comprises a pump and flow-meter for sampling the atmosphere, a heated tube for decomposing the vapours to hydrochloric acid, and apparatus for absorbing the latter in alkali and titrating.

The main difficulty in the application of such methods to the determination of traces of gases in the atmosphere, however, is to obtain a sufficient quantity of the gas to analyse. An example will, I think, make this clear. Assuming that a gas reacts molecule for molecule with the reagent, it can easily be calculated that, to obtain what is usually regarded as a suitable titre—say, 20 c.c. of an $N/50$ solution—would require 10 c.c. of the gas

approximately. When it is remembered that concentrations at least as low as 1 part in 100,000 would frequently have to be estimated, it will be realized that to obtain this volume of gas no less than 1000 litres of the contaminated air would have to be used. A sample of this magnitude could not, obviously, be taken in a few minutes, since, even with the most efficient bubblers, etc., a considerable proportion of the gas might be lost if too rapid a rate of sampling were used. Such a sample would, then, give only an average figure for the concentration present in the air over a considerable period, and would not show any sudden rises in concentration for short periods. In addition, the sample would usually have to be transferred to a laboratory for estimation by trained personnel, and the result would not be available for some little time.

Methods based on ordinary analytical methods are then, generally speaking, of little value for detecting what I have termed the "immediate" dangers from gassing—that is to say, the dangers arising from sudden, unexpected evolutions of gas in comparatively high concentrations. They would, however, be useful for regular routine analysis of the air in work-rooms, etc., where speed is not essential; such methods are, in fact, used for this purpose to a great extent by the Russians.

Colorimetric Methods.

We come now to the third type of method which can be used for gas analysis—namely, colorimetric and nephelometric methods. Most of the commonly occurring industrial gases and vapours can produce highly coloured compounds with suitable reagents, the colour produced being usually quite readily perceptible even with minute amounts of the gases. Some gases, too, give precipitates with certain reagents, which are still visible as a slight turbidity in the solution when the amount of gas present is extremely small.

Reactions of these types have of recent years been largely applied to the quantitative estimation of minute amounts of metals, etc., the depth of colour or degree of turbidity produced under standard conditions being compared with that given by known amounts of the particular substance being estimated. From the point of view of sensitivity, and hence the reasonably small samples of the air which would be required, such methods are particularly suitable for the estimation of toxic concentrations of gases in the atmosphere. In addition, the apparatus and technique required are usually simple, and the colour reaction is in most cases produced immediately or by the simple addition of one or more reagents, so that tests of this nature could be carried out by untrained personnel, and the results would be available sufficiently rapidly to give due warning of any immediately dangerous atmosphere.

Colorimetric reactions have been largely used for the purely qualitative detection of various gases and vapours in the atmosphere, but only in comparatively few cases have any efforts been made to make the tests roughly quantitative.

Colour tests can be applied in various ways. Perhaps the simplest form is the test-paper. Here the reagent is simply absorbed on filter-paper, and the paper then exposed to the atmosphere under test. If any traces of the gas are present, a characteristic stain is obtained on the paper. To a

certain extent, the more gas there is present, the deeper is the stain, and in the case of a few gases use has been made of this fact to make the test-paper a roughly quantitative test. Usually it is specified that a strip of test-paper shall be suspended, or waved about, in the atmosphere for a stated time, and the stain obtained then compared with a chart showing the colours obtained with known concentrations of the gas.

For example, in the process of fumigation of buildings, etc., with hydrogen cyanide, it is recommended that before the buildings are re-entered, a benzidine–copper acetate paper should be waved about in the atmosphere for 15 seconds, and the colour, if any, obtained on the paper compared with a set of standards representing different concentrations. Unless the concentration shown is 1 part in 100,000 or less, the building should not be entered.[1]

Again, the Post Office Research Department have introduced a simple instrument based on the depth of stain produced on a test-paper, for detecting the presence of dangerous concentrations of carbon monoxide in manholes, etc.[11] This resembles a photographic exposure meter, and contains a disc of absorbent paper, successive small areas of which can be impregnated with palladium chloride solution and immediately exposed to the atmosphere for 5 minutes. Two coloured buttons, one on either side of the exposed portion of the paper, represent the colours which will be obtained in a safe and a dangerous concentration of the gas, respectively.

Perhaps one of the most interesting applications of test-papers to the determination of dangerous concentrations of gases is the automatic alarm devised for hydrogen sulphide.[12] This is a permanent installation in which a moving strip of lead acetate paper is exposed to the atmosphere, whilst at the same time a beam of light is allowed to pass through it and fall on to a selenium cell. The amount of light passing through the paper, and hence the current produced by the cell, depends on the depth to which the paper is stained by any hydrogen sulphide present. When the gas reaches a dangerous concentration, and the stain is very dense so that little light can penetrate, it is arranged that an alarm bell is automatically caused to ring.

In place of test-papers, ampoules consisting of a thin-walled sealed tube containing palladium chloride solution, wrapped in an outer covering of absorbent material, have been introduced to estimate concentrations of carbon monoxide in the atmosphere. The ampoule is crushed in the hand, the reagent then being absorbed by the covering, and the whole exposed for 5 minutes. The resulting colour is compared with a graduated chart.

There is one factor which is, however, usually overlooked in applying test-papers (or ampoules) to the quantitative determination of gases—namely, that, when the paper is merely suspended in or waved about in the atmosphere, the actual amount of gas coming into contact with it, and therefore the depth of stain obtained, is partly dependent on the extent to which the air is in motion, or the speed at which the paper is waved about. To illustrate this I can give you some actual figures obtained, using a test-paper for chlorine impregnated with potassium bromide and fluorescein. This gives a yellow paper which turns pink in chlorine, due to the formation of eosin. The paper was exposed to a certain concentration of the gas in an exposure meter type of instrument, and the time taken to reach a definite tint noted. In still air this time was 60 seconds, but when a fan was

started it was reduced to only 33 seconds, since the volume of the gaseous mixture coming into contact with the paper in a given time was thereby increased.

Some results published a few years ago by Page and Gloyns [13] show a similar effect. A benzidine–copper acetate paper for hydrogen cyanide was used, and it was shown that in a certain concentration of the gas the actual volume of the mixture reacting with the paper in a specified time was 35 c.c. when the paper was at rest, and 70 c.c. when it was waved about.

Test-paper methods as usually applied give, then, only a somewhat rough idea of the concentration present, though from the point of view of simplicity, speed, and sensitivity they are admirably suited for industrial use.

Quantitative colorimetric tests for gases and vapours can also be applied by drawing a known volume of the gas either through a solution of the reagent, or through a suitable absorbent, the reagent in the latter case being added later. In each case the colour is compared with standard coloured solutions. Little use has in the past been made of such methods in industry, though if some simple means of sampling the atmosphere is available they are of considerable use.

In a number of instruments based on colour reactions which have recently been designed abroad, the reagent is deposited on some sort of inert granules. Small tubes are filled with these, and inserted in a device by means of which the air can be drawn through them by squeezing a rubber bulb. Either the depth of colour or the length of stain produced with a certain number of squeezes of the bulb is used as a measure of the concentration of gas present, by comparing the tube with similar tubes artificially coloured. Possibly the best-known detector of this type is the M.S.A. Carbon Monoxide Detector, in which the air is drawn through a tube of pumice granules impregnated with iodine pentoxide and fuming sulphuric acid. Concentrations of carbon monoxide down to 1 part in 2000 produce various shades of blue-green. The M.S.A. Hydrogen Sulphide and Hydrogen Cyanide Detectors are very similar, the length of stain produced on granules impregnated with suitable reagents being used as a measure of the concentration of gas present. A similar form of detector for carbon monoxide has recently been introduced in Germany, which uses silica gel impregnated with palladium chloride.

Apart from permanent installations, such as the automatic alarms for hydrogen sulphide and carbon monoxide, which I have just described, instruments of this type are probably the most satisfactory of the methods with which I have dealt up to now for determining rapidly the safety or otherwise of industrial atmospheres. The principle has, however, been applied only to the three gases I mentioned—carbon monoxide, hydrogen sulphide, and hydrogen cyanide.

D.S.I.R. Tests.

Reviewing the existing methods of gas analysis as a whole, therefore, it will be seen that, except for one or two gases, none of them completely satisfies our requirements. The urgent need for a series of sensitive quantitative tests, which would be simple in manipulation, require only

inexpensive and readily portable apparatus, and be capable of giving rapid warning of the presence of dangerous concentrations of gases, was realized a few years ago by the Home Office who initiated discussions with the Association of British Chemical Manufacturers. As a result of these it was decided that the Department of Scientific and Industrial Research should arrange for an investigation to be undertaken by the Chemical Defence Research Department to develop suitable tests for a series of twelve of the most frequently encountered gases and vapours.

I propose now to tell you something of this investigation, on which I have been engaged for the past few years, and of the methods which have been devised and which are now being published for the Department of Scientific and Industrial Research by H.M. Stationery Office.

In the first place, it was clear that colorimetric methods were, alone, likely to fulfil all the requirements for the tests, and work was therefore confined to these. Test-papers represent the simplest form of colour test, and it was decided that wherever possible they should be used, the stain produced on them under carefully standardized conditions being compared with those obtained under the same conditions with known concentrations of the gases.

You will remember, however, that I showed just now that the usual methods of applying test-papers to the quantitative determination of gases were not satisfactory, since the stain obtained with a given concentration of gas varied somewhat with the state of motion of the air. To overcome this difficulty, and render a test of this kind more accurately quantitative, it was necessary to ensure by some means that a definite known volume of the air under test reacted with a definite area of the paper. This has been achieved by introducing the principle of drawing a measured volume of the air *through* a standard area of the test-paper, the device used for doing this being a small hand exhausting-pump of specified capacity. The test-paper is clamped firmly in a specially designed metal holder, which screws into the nozzle of the pump. In order to carry out a test, a convenient number of strokes of the handpump (say 1, 3, 5, 10, 20, etc.) are made slowly and steadily; the paper is then removed from the clamp, and the stain obtained compared with a permanent printed colour chart. This shows the colours obtained, using varying numbers of strokes of the pump, in concentrations of the gas varying from very high concentrations immediately producing serious effects to those which are quite harmless even for lengthy exposures. In this way any dangerous concentrations of the gases can be determined with a fair degree of accuracy within a few minutes.

It was found possible to adopt the technique I have described for five of the gases investigated.

Hydrogen Sulphide.[14]

For hydrogen sulphide the well-known lead acetate paper was found to be suitable. By using not more than five strokes of the pump, clearly defined stains are produced with this gas in concentrations as low as 1 part in 150,000. It is usually considered that concentrations of hydrogen sulphide lower than 1 part in 30,000 are unlikely to produce any harmful effects, so that the test will always provide adequate warning of danger.

Arsine.

Arsine is considerably more toxic than hydrogen sulphide, and the available physiological data indicate that for an exposure of several hours the concentration should not be allowed to exceed 1 part in 200,000. It was found possible to determine concentrations of this order readily, using a test-paper impregnated with mercuric chloride and dried. Yellow or orange stains are obtained, and a chart has been made showing the shades produced by concentrations ranging from 1 part in 5,000 to 1 part in 250,000, using up to fifty pump strokes.

Hydrogen sulphide, if also present, would interfere with this test, since it produces stains with mercuric chloride. The possibility of this can, however, be avoided by clamping a lead acetate paper in front of the mercuric chloride paper in the paper-holder.

Hydrogen Cyanide.[15]

A number of tests have been proposed for hydrogen cyanide; most of these were found to be rather too insensitive for the purpose in view, it being necessary to determine with certainty concentrations of this gas at least as low as 1 part in 50,000. Eventually two tests were selected, which were readily capable of detecting concentrations of this order, and which could be applied by means of the handpump-test-paper technique. In the first test filter-paper is impregnated with a mixed solution of benzidine acetate and copper acetate, and is used while it is still just damp. Blue stains of varying depths are given by traces of hydrogen cyanide, a concentration as low as 1 part in 100,000 being estimated with only eight strokes of the pump. The stain is due to the formation of a blue oxidation compound of benzidine.

The second test for hydrogen cyanide has roughly the same sensitivity as the benzidine–copper acetate test. In this test a dry paper is used, which has been impregnated first with Congo-red and then with silver nitrate. This gives a reddish-purple paper, which is turned to various shades of bluish-purple and blue in the presence of the gas, the reaction being as follows: hydrogen cyanide is too weak an acid to turn Congo-red paper blue on its own; in the presence of silver nitrate, however, nitric acid is liberated, which gives the characteristic blue colour to the paper.

Both tests have their limitations in that neither is specific for hydrogen cyanide, the benzidine–copper acetate test being affected by certain oxidizing gases, such as chlorine, whilst the Congo-red papers are, of course, affected by strongly acidic gases. Traces of interfering gases can, however, frequently be removed by interposing suitably impregnated papers in front of the hydrogen cyanide paper.

Phosgene.

For the determination of phosgene, test-papers impregnated with diphenylamine and *p*-dimethylaminobenzaldehyde were used. These give a yellow colour with phosgene, and when used with the handpump will determine concentrations of the gas varying from 1 part in 10,000 to 1 part in 1,000,000 in a few minutes. As I mentioned earlier, phosgene is

a particularly dangerous gas, but concentrations lower than 1 part in 1,000,000 may be regarded as having little harmful effect.[16]

The test-papers used for phosgene are also affected by hydrogen chloride, although their sensitivity to this gas is considerably less than to phosgene. Traces of hydrogen chloride can, however, be removed by passing the sample of air first through a tube containing suitably impregnated granules.

Sulphur Dioxide.[17]

Sulphur dioxide in minute amounts liberates iodine from a potassium iodide–iodate solution, and this reaction has been applied to a test-paper. The papers are immersed in a solution of these reagents, containing in addition starch and glycerol, the latter being added to maintain the test-papers sufficiently moist for absorbing the gas. Using the handpump, concentrations down to 1 part in 250,000 can be estimated with ten strokes. Concentrations less than 1 part in 100,000 are unlikely to produce any physiological effects.[18]

Carbon Monoxide.

The determination of low concentrations of carbon monoxide presented considerable difficulty. Apart from the hopcalite recorder, which I described earlier, and which, although of considerable value in certain circumstances, is not suitable for general industrial use, the only sensitive tests are those depending on the liberation of iodine from iodine pentoxide, and on the reduction of palladium chloride to palladium. The iodine pentoxide method, when employed in the form of impregnated granules as in the M.S.A. Detector, gives a rapid reaction with the gas, but the colour produced is very transient, and it is difficult to obtain any degree of accuracy. The method, too, is rather insensitive, the minimum concentration detectable with this instrument being about 1 part in 2,000. Whilst concentrations of this order do not usually produce very severe effects, it has been shown that, when exposure to the atmosphere is likely to be prolonged, it is desirable that the concentration should not exceed 1 part in 10,000.[19]

The palladium chloride method is readily applicable to test-papers, but the reaction with carbon monoxide is very slow, and the use of the hand-pump technique was therefore impossible, no stain being obtained on the paper even when comparatively high concentrations of the gas were drawn through it. It was found, however, that if the air under test were drawn very slowly through the test-paper for several minutes, stains could be obtained even in low concentrations. A test based on these lines has therefore been introduced, the paper-holder in this case being inserted in the bung of an aspirator, by means of which the air can be drawn through the paper at a specified rate, by running out water at the same rate. From the time taken to obtain a standard depth of stain under these conditions, the concentration of carbon monoxide present is estimated. In this way a concentration of 1 part in 500 can be determined within 2 minutes, and a concentration of as low as 1 part in 12,000 in 40 minutes. Although this test is, for low concentrations, considerably slower in application than those I have described for other gases, it nevertheless gives an almost immediate

warning of concentrations which it would be dangerous to breathe even for a short period.

The palladium chloride test-paper is also stained by hydrogen sulphide, and by other gases with a reducing action; in order to avoid interference with the test, it is therefore arranged that the air sample is drawn first through a tube filled with activated charcoal, which adsorbs these gases, but allows carbon monoxide to pass through.

None of the remaining six gases and vapours could be determined satisfactorily by means of test-papers. Five of them, however, gave sensitive colour reactions with solutions of appropriate reagents, and these have been standardized on a quantitative basis in a similar manner to the test-paper tests. The handpump has again been used for sampling the atmosphere, the air in this case being drawn through a bubbler containing a specified volume of the reagent (or of a suitable absorbent to which the reagent is added afterwards), the colour produced with a certain number of strokes of the pump being compared with a series of standard coloured solutions, representing the colours obtained with known concentrations. No definite form of apparatus has been laid down for these tests apart from the standard hand-pump, but a layout has been suggested which embodies only cheap and readily available apparatus. In this an ordinary side-arm test-tube is used as a bubbler, and a reagent bottle as a trap between this and the pump. Both are attached to the pump, so that the whole equipment is readily portable. More expensive and elaborate forms of apparatus can be used if desired, as long as the essential conditions of the tests are adhered to.

The reactions which have been used for the various gases and vapours, and the concentrations detectable are as follows :—

Chlorine.

For chlorine the *o*-tolidine reaction has been used. A solution of this reagent in hydrochloric acid produces with traces of chlorine a yellow colour, which can be exactly matched by dilute solutions of potassium dichromate. Concentrations as low as 1 part in 1,000,000 can be determined in this way, using twenty-five strokes of the handpump. This is usually given as the maximum safe concentration of chlorine for a prolonged exposure.[16]

Nitrous Fumes.[20]

The well-known Griess–Ilosvay reaction has been developed into a quantitative test for nitrous fumes. In this the gas is passed through an acetic acid solution of sulphanilic acid and α-naphthylamine, a pink colour being produced by diazotization. The colour is matched with standard dilute solutions of dimethylaminoazobenzene in acid. 1 part in 100,000 has recently been shown to be the maximum safe concentration of nitrous fumes; this concentration can be readily determined by the test I have described.

Aniline.

As I remarked earlier, aniline is capable of causing serious illness on repeated exposure to very low concentrations, and it is necessary, therefore, that the test selected for it should be sensitive to such concentrations to

enable routine tests of workrooms, etc., to be carried out. The familiar bleaching powder reaction is not sufficiently sensitive, but if an ammoniacal solution of phenol is added to the bleaching powder–aniline solution, a deep blue colour is produced even with minute amounts of aniline. A quantitative test, using the handpump technique, has been developed on these lines, which will determine concentrations down to 1 part in 100,000.

Carbon Disulphide.[21]

A method for determining concentrations of carbon disulphide vapour ranging from 1 part in 750 to 1 part in 120,000 has been devised, based on the colour produced when the vapour reacts with diethylamine and copper acetate. The colour is prepared with standards made from the reagents and known quantities of liquid carbon disulphide. As in the case of aniline, owing to the possibility of chronic poisoning from carbon disulphide vapour it was necessary to develop a highly sensitive test, even though for a single exposure comparatively high concentrations can be endured without ill effects.

Benzene.[22]

For benzene a test which will determine concentrations down to 1 part in 10,000 was necessary, this being the maximum concentration desirable for repeated exposures.[23] Most of the methods which have been proposed for estimating benzene vapour have been based on its nitration by means of strong sulphuric and nitric acids, with subsequent colorimetric estimation of the nitro-compounds. The processes are usually somewhat lengthy and complicated, and are not very suitable for the purpose of a simple rapid test. It was found, however, that the vapour gave with concentrated sulphuric acid containing a trace of formalin a brown colour, by means of which concentrations at least as low as 1 part in 10,000 could be determined by comparison with a standard made from a solution of sodium nitroprusside. Toluene vapour in approximately the same concentrations also produces the same depth of colour with the reagent. Since the toxicities of the two vapours are roughly the same, however, it is not usually necessary to distinguish between them.

For the eleven tests I have described, an alternative method has been introduced for estimating from the colours obtained the concentration of gas present. This consists of a simple form of Comparator in which the experimental colours, whether in solution or on test-papers, can be compared with standards made up of combinations of the well-known Lovibond colour glasses, in place of the colour charts or standard coloured solutions. I must emphasize, however, that while the Comparator has certain advantages, particularly in the case of tests carried out in solution, where the preparation of accurate standard solutions from time to time would thus be eliminated, it does not in any way increase the accuracy of the tests. Its use is entirely optional, and equally good results will be obtained using the colour charts or liquid standards.

Chlorinated Hydrocarbons.

The remaining member of the group of twelve gases and vapours investigated is actually itself a group of vapours—namely, those of the

chlorinated hydrocarbons. For these, in view of the similarity in their physiological effects, it was not considered necessary to develop a separate test for each compound.

No convenient colorimetric methods were available for these compounds, and a test employing the so-called "halide lamp" has been introduced. This consists of a simple type of blow-lamp, which burns pure alcohol, the air supply being drawn in through a sampling tube. If the air contains traces of any organic halides, these are drawn into the flame and decomposed, the halogen then forming the corresponding copper halide by reaction with a small copper screw in the nozzle of the lamp, and so colouring the flame green. For a given compound, the greater the concentration present, the more intense is the colour of the flame. By means of this test it was found that for each of the compounds investigated concentrations lower than those which will produce chronic effects could readily be detected. The lamp has been made roughly quantitative by determining for each vapour the approximate intensity of colour of the flame at different concentrations.

The standardisation of each of the tests I have described has been carried out in the laboratory by setting up various known concentrations of the gases and determining the colours given by these concentrations under the conditions specified. For this purpose a continuous flow apparatus was used, in which the gas or vapour was successively diluted with air in a number of stages, the volumes of gas and air involved at each stage being controlled by means of carefully calibrated flowmeters. From the readings of the various flowmeters the concentration finally obtained could be calculated, and this was further checked by occasional determinations by ordinary chemical methods. When sufficient samples had been taken at a particular concentration to determine with certainty the colour it produced with the reagent, a fresh concentration could almost immediately be set up by adjusting the control valves.

Each test when completed has been tried out by various firms under actual industrial conditions, and in some cases minor modifications of technique have been made as a result of the experience gained.

In every case the procedure to be followed in carrying out the tests has been made as simple and straightforward as possible, so that the training of responsible workers in their performance would be a comparatively easy matter. None of the tests, as you have seen, requires any very elaborate or costly apparatus, and once this has been obtained it is applicable to a number of gases, whilst the actual cost of carrying out the various tests is negligible.

The tests are being published by H.M. Stationery Office as a series of separate pamphlets, each of which contains, in addition to full details of procedure, a summary of the existing data on the physiological effects of the gas, and, where possible, an opinion as to the highest concentration which is not deleterious to breathe for extended periods.

In conclusion, I should like again to emphasize the importance to the safety and health of the industrial worker of carrying out frequent tests of the atmosphere he has to work in, and to express the hope that the tests that are now being introduced for this purpose will be made use of.

References.

[1] *J. Hyg.*, 1939, **39**. 12.
[2] Henderson and Haggard, "Noxious Gases," 1927.
[3] Leschke, "Clinical Toxicology," 1934.
[4] *Arch. f. Hyg.*, 1913, **77**, 323.
[5] *H.O. Quarterly Abstracts*, 1937, **15**, Ab. 25.
[6] *Industr. Chem.*, 1934, **10**, 67.
[7] U.S. Public Health Bull., 185, 1929.
[8] *J. Industr. Hyg.*, 1936, **18**, 277.
[9] *J. Amer. med. Ass.*, 1938, **110**, 1543.
[10] H.O. Factory Form 814.
[11] B.P. 396,672, 1933.
[12] *Chem. Age*, 1934, **30**, 310.
[13] *J. Soc. chem. Ind.*, 1936, **55**, 209T.
[14] "Methods for the Detection of Toxic Gases in Industry," Leaflet No. 1. H.M.S.O. 1937.
[15] *Ibid.*, No. 2. H.M.S.O. 1938.
[16] U.S. Bureau of Mines, Tech. Paper, 248, 1921.
[17] "Methods for the Detection of Toxic Gases in Industry," Leaflet No. 3. H.M.S.O. 1938.
[18] *Engng and Mining J.*, 1919, **107**, 693.
[19] *Brit. Med. J.*, 1930, **2**, 16.
[20] "Methods for the Detection of Toxic Gases in Industry," Leaflet No. 5. H.M.S.O. 1939.
[21] *Ibid.*, No. 6. H.M.S.O. 1939.
[22] *Ibid.*, No. 4. H.M.S.O. 1939.
[23] *J. Industr. Hyg.*, 1927, **9**, 61.

ERRATUM.

Journal, (May), 1939, **25** (187), 263. "Thermometric Determination of Transition Points in Paraffin Wax." By H. D. Lord, Ph.D. Footnote should read: "* Paper received 29th April, 1939."

OBITUARY.

CHARLES OSWALD FREWIN JENKIN.

Mr. Charles Oswald Frewin Jenkin, M.A., A.I.C., M.Inst.Pet., died at his home in Gerrard's Cross on June 3rd, 1939, at the early age of 48. His career, so sadly cut short, was brilliant. From Rugby he entered King's College, Cambridge, with a scholarship, and studied mathematics and science, obtaining first-class honours in Part II of the Natural Sciences Tripos. On leaving Cambridge in 1913 he took up a position as Lecturer in Science in Delhi, but returned to England in 1915. He then joined the Suffolk Regiment as a Lieutenant and served in France. He was recalled in 1916 because of his chemical attainments and became assistant manager of a high explosives factory under the Ministry of Munitions and later served on the research staff of the Munitions Inventions Department.

Immediately after the War he joined the Shell Group, as Manager of the small refinery at Barrow. In 1921 he went to Suez where he became Manager of the Anglo-Egyptian Oilfields Refinery, and in 1924 took up a position in the London office, during which period he played an active part in the erection of the lubricating oil plant at Shell Haven. In 1927 he went to California where he remained for ten years, functioning as Refinery Manager at Martinez and at Wilmington. The last year and a half of his career was spent in the London office, dealing with refinery control.

Those who had the privilege of knowing Mr. Jenkin personally appreciated his cheerfulness, his enthusiasm in and devotion to his work, his interest in his staff and his willingness to help, in whatever way he could, the interests of the organization to which he was proud to belong.

He was elected an Associate of the Institute of Chemistry in 1917 and a Member of the Institute of Petroleum in 1924.

To Mrs. Jenkin and her four young sons we offer our heartfelt sympathy.

J. K.

ABSTRACTS.

	PAGE
Geology	194 A
Geophysics	196 A
Drilling	197 A
Transport and Storage	197 A
Crude Petroleum	198 A
Gas...	198 A
Cracking	198 A
Hydrogenation	199 A
Polymerization	200 A
Synthetic Products	201 A
Refining and Refinery Plant ...	201 A
Chemistry and Physics of Petroleum	203 A
Analysis and Testing	208 A
Motor Fuels	212 A
Lubricants and Lubrication ...	213 A
Gas, Diesel and Fuel Oils ...	215 A
Asphalt and Bitumen	215 A
Special Products	217 A
Detonation and Engines... ...	218 A
Coal and Shale	220 A
Economics and Statistics ...	220 A
Books and Publications Received	223 A

AUTHOR INDEX.

The numbers refer to the Abstract Number.

Abakumovskaya, L. N., 604
Ackley, K. A., 549
Aldridge, B. G., 628
Alexanian, C. L., 582
Andant, A., 595
Arveson, M. H., 612

Balsbaugh, J. C., 617
Bataafsche Petroleum Mij., N.V. de, 624
Benzol-Verband, 620
Bernal, S. G., 652
Bielenberg, W., 594
Blair, C. M., Jr., 568
Bloch, H. S., 599
Board of Trustees of University of Illinois, 569
Braun, J. von, 591
Breyer, F., 563
Brooks, B. T., 638
Brown, A. B., 628
Brunstrum, L. C., 612
Budenholzer, R. A., 605
Burk, R. E., 624

Canepa, E. P., 649
Cannon, M. R., 625
Clark, F. M., 616
Cooke, H. B., 624
Cooper, C., 586
Creanga, C., 584
Czerski, L., 609

Dawson, O. H., 573
Deitmers, F., 587
Delemar, L., 583
Dolbear, C. E., 624
Dreyfus, H., 580

Edwards, T. O., Jr., 624
Egloff, G., 599
Engel, W. F., 615
Ewell, R. H., 606

Faber, G., 647
Fabre, R., 598
Falcke, H., 556
Fallah, R., 601
Faure, L. L., 568
Fenske, M. R., 625, 628
Ferris, S. W., 628
Feutchtinger, R., 565
Fieldner, A. C., 645
Fischer, J., 583
Fleiger, A. G., 618
Flohr, H., 655
Florez, L. de, 573

Gomer, A., 614
Graefe, E., 627
Grage, V. P., 550
Groote, M. de, 568
Grosse, A. V., 575
Guthrie, B., 646

Haack, W., 557
Halloran, R. A., 628
Hass, H. B., 607
Heid, J. B., 633
Heisig, T. C., 573
Hendrey, W. B., 628
Henriques, H. J., 628
Hershman, P. R., 568
Hileman, G., 649
Hoog, H., 577
Houdry, E. J., 573
Hughes, E. C., 624
Hummel, J. N., 561

I. G. Farbenindustrie, A.-G., 579
Ipatieff, V. N., 576
Irwin, J. L., 555

Jackzel, J., 631
Jacob, P., 574
Johnson, G. W., 579

Kadmer, E. H., 626
Keeling, W. O., 624
Keiser, B., 568
Kendall, P., 634
Kerstein, N. A., 618
Khokhryakov, P. A., 621
Kneule, F., 611
Knowles, E. C., 628
Koch, H., 571, 572
Kodak, Ltd., 624
Kolbel, H., 629
Koppers', H. Industrieele Mij. N.V., 588

Lacey, W. N., 605
Lanchester, F. W., 641
Lang, E. H., 624
Lapparent, J. de, 581
Laudon, L. R., 551
Lazzari, G., 622
Lecomte, J., 596
Leendertse, J. J., 602
Leenhouts, W. M., 578
Lonsdale, T., 630
Louis, M., 589, 592
Lubiger, F., 562
Lyman, A. L., 628

McCaffrey, J. W., 573
McCluer, W. B., 628
MacCoul, H., 642
McKittrick, D. S., 628
Maillard, A., 593
Mizuta, M., 624
Mond, A. L., 579
Morrell, J. C., 575
Moynot, M., 643
Müller, J., 590
Müller, K. O., 566
Myddleton, W. W., 588
Myers, W. A., 628

Nametkin, S. S., 603, 604
Navarre, R., 583

Oncley, J. L., 617
Osterstrom, R. C., 624

Pastonesi, G., 623
Patryn, T., 619
Pier, M., 574
Pilat, S., 590, 608
Piotrowski, W. de, 635
Piper, J. D., 618

Ragatz, E. G., 628
Rau, H. L., 549
Richter, M., 610
Roberts, O. L., 628
Rogers, T. A., 644
Rudenko, M. G., 603, 604
Rülke, O., 561

Sage, B. H., 605
Schick, F., 628
Schmidt, A. W., 611
Schoene, H. J., 559
Schultz, W. A., 624
Scott, A. T., 624
Sereda, J., 608
Siegle, L. W., 607
Sigwalt, R., 614
Simon, W., 574
Slon, M., 597
Smith, C. C., 618
Smittenberg, J., 577
Society Chemical Industry, Basle, 575
Solcia, E., 588
Standard Oil Development Co., 639
Stark, D. D., 624
Staronka, W., 609
Steinbrink, H., 571
Szankowski, W., 590

Tannehill, A. L., 624
Temme, T., 632
Thyssen, S. von, 560, 561
Trustadt, S., 653
Turyn, I. K., 654

Universal Oil Products Co., 579, 624
Urbanski, T., 597

Van der Hoeven, H. W., 613
Van der Vet, A. P., 600
Van Voorhis, M. G., 570
Vickery, F. P., 628
Visser, G. H., 577, 615
Vogt, C. J., 644

Waagen, L., 564
Warren, E. F., Jr., 550
Waterman, H. I., 602
Weber, H., 632
Weith, A. J., 637
Westenberg, J. E., 579
White, E. R., 624
Wicher, C. A., 558
Wilson, A. L., 585
Wilson, J. S., 630
Winkler, J., 635
Woog, P., 614

Yabroff, D. L., 624
Yoshimura, T., 624

Geology.

549. Geology and Development of Keokuk Pool, Seminole and Pottawatomie Counties, Oklahoma. H. L. Rau and K. A. Ackley. *Bull. Amer. Ass. Petrol. Geol.*, 1939, **23** (2), 220–245.—Located in the north-west part of Seminole and the north-east of Pottawatomie, Keokuk Pool was the first pool in Oklahoma where reservoir pressures were maintained through voluntary restriction in the rate of production.

Stratigraphically, the surface rocks of the area consist of sands and shales of the Pontotoc group (Upper Pennsylvanian). At approximately 80 ft. below the surface the Pawhuska limestone is encountered. This is followed by nearly 4000 ft. of other Pennsylvanian sediments and 375 ft. of Mississippian beds before the Silurian and Devonian producing zones are reached. The sub-surface formations are shown in a generalized vertical section, and are described in the order in which they were encountered by the drill.

Structurally, the Keokuk pool is anticlinal and faulted on the east side. The area was affected by at least three periods of adjustment with intervening periods of submergence and more or less continuous deposition. The chief cause, however, of the faulting and folding in the Keokuk Pool was probably the period which occurred in early Pennsylvanian or late Mississippian time.

The Misener sandstone is the main producing formation in the Keokuk Pool, and from this and the underlying Hunton limestone 6,362,224 brls. of oil have been obtained from 106 wells to January 1938. It is estimated that a final recovery of 8000 brls. per acre may be expected from this zone in the central and south parts of the pool. Moreover, it is thought that 1000–2000 brls. per acre may be recovered from the Pennsylvanian zones. G. S. S.

550. Lisbon Oil-field, Claiborne and Lincoln Parishes, Louisiana. V. P. Grage and E. F. Warren, Jr. *Bull. Amer. Ass. Petrol. Geol.*, 1939, **23** (3), 281–324.—Discovered in December 1936, the Lisbon Field is the fourth producing field developed in Claiborne Parish, Louisiana.

Underlying the Lisbon Field occur the Comanche Cretaceous rocks, which is an important series from the standpoint of oil development in this region. It is from the Patton limestone zone of Lower Glen Rose age, at an average depth of 5200 ft., that production is obtained. The limestones are very porous and of variable lithological character and thickness; the predominant type is a coarse-textured oolitic rock with varying admixtures of fine-grained sand and calcareous mud. It is likely that localization of oil may have originated in these porous limestones.

It would appear from present data that the Lisbon field is a south-west plunging nose, open to the north-east, with major structural axis aligned N. 30° E.

Peak production was reached during October 1937, when the greatest daily allowable was 15,000 brls., the total for the year being 2,440,640 brls. On 1st February, 1938 the State allocated 10,000 brls. daily, based on 3252 developed acres.

G. S. S.

551. Stratigraphy of Osage Sub-series of North-eastern Oklahoma. L. R. Laudon. *Bull. Amer. Ass. Petrol. Geol.*, 1939, **23** (3), 325–338.—In this paper the author confirms evidence advanced by L. M. Cline in his generalized report on South-west Missouri, North-west Arkansas, and North-east Oklahoma. Detailed stratigraphical sections throughout the area are now recorded and measurements given of exposures in the Osage subseries of the Mississippian in North-east Oklahoma.

Faunal collections from each of the recognizable zones within the formations have also been made. G. S. S.

552. Oil Prospecting Licences in Palestine. Anon. *Petrol. Times*, 8.4.39, **41** (1056), 444.—A map is given which shows the approximate positions of a number of prospecting licences granted in Palestine. All have been taken up by the Iraq Petroleum Co. on behalf of Petroleum Development (Palestine), Ltd. G. D. H.

553. "Anglo-American's" British Oil Search. Anon. *Petrol. Times*, 25.3.39, **41** (1054), 377–378.—Midlothian No. 2 has been completed at a depth of 2942 ft. and is

to be tested, for seven prospective oil horizons have been noted. The porosity of these horizons is low, ranging from 3% to 12%, and hence the results are likely to be poor. This well is also 400–600 ft. lower structurally than No. 1, as a consequence of which the sands may be watered. Midlothian No. 3 is to be drilled 220 yd. north-east of No. 1. G. D. H.

554. Progress of " D'Arcy Exploration's " British Oil Search. Anon. *Petrol. Times*, 29.4.39, **41** (1059), 541.—A further geological bore is to be drilled at Chaldon Down to investigate the Wealden sands on the flank of an anticline in the Jurassic, which was indicated by the first boring.

After acidization and solvent treatment of the Hardstoft well, the production has settled down to about 2 tons/day, which is a marked improvement on the previous output.

Cousland No. 2 is more than 2000 ft. deep, and in the Oil Shale Group, whilst No. 3 is in the same beds at a depth of over 1000 ft. Shallow geological bores have been drilled at Pentland, and four shallow bores at Balfour (Fifeshire) have proved the existence of an anticline.

Gas was encountered at 4212 ft. in Eskdale No. 2, but mechanical difficulties have delayed testing. The Carboniferous Limestone was devoid of oil at Gun Hill, although the Millstone Grit and the Limestone Shales had small indications of oil. The Eakring test is in Permian limestone at a depth of 1200 ft. Geological bores are in progress at Formby (Lancashire) and Ashby (Derbyshire). G. D. H.

555. Alberta's Remarkable Oil Progress in 1938. J. L. Irwin. *Petrol. Times*, 25.2.39, **41** (1050), 255–257.—The Alberta production in 1938 was 6,742,039 brls. of oil, against 2,796,908 brls. in 1937. The two most important events of the year were the bringing into production of Home No. 2 (2 ml. north-west of the most northerly crude producer of Turner Valley) and Okalta No. 6 (1 ml. west of the southern proven zone). The former was completed below the porous zones at a depth of 8495 ft. It is 17 ml. from the proved crude zone at the southern end of the valley. The second well is being held up by water troubles. At the end of 1938 there were sixty-four crude producing wells in Turner Valley.

Gas conservation was introduced in 1938 and a new basis for proration came into force.

Gas sands have been encountered in North Taber Royalties No. 1, and oil has been revealed in the Ribstone area. The Ram River well found oil in the Devonian at 400 ft. Tests are being made in various other regions : the Alberta–British Columbia boundary, the Brazean area, Saskatchewan border, at Steveville, Moose Dome, the Crows-nest area, Castle River, Savannah Creek, Milk River, and Del Bonita.

G. D. H.

556. Oil Deposits in Chile. H. Falcke. *Petrol. Z.*, 1939, **35**, 10–12.—The Government of Chile has stopped all subsidies for further drilling in the area of the Magallanes, so that there is no possibility of Chile becoming an oil-producing country in the next few years. On the other hand, the observations of the author during his repeated visits to the country appear to indicate that there is some hope of finding oil deposits, mainly in the area of the High Cordilleras in the far north. E. W. S.

557. Position of Oil Deposits in Germany and their Stratigraphical Classification. W. Haack. *Petrol. Z.*, 1939, **35**, 61–62.—An index in connection with a map made up by the Preussische Geologische Landesanstalt shows the arrangement of the oil-fields from the political and geographical standpoint as well as from the point of view of stratigraphy. A list is given of all the formations where oil deposits have been found in Germany. E. W. S.

558. New Results of Practical Micropalæontology. C. A. Wicher. *Petrol. Z.*, 1939, **35**, 1–2, 65–66.—Report of the 32nd, 34th, and 35th meetings of the Research Division for Micropalæontology, Department of the Prussian Institute for Petroleum Geology, Berlin. Some of the chief geologists of the State and of the companies engaged in

drilling operations in Germany, including some foreign firms, give their opinion regarding the possibility of identifying different strata by shells and other remains of the fossil microfauna. E. W. S.

Geophysics.

559. New Apparatus for the Measurement of Permeability. H. J. Schoene. *Oil u. Kohle*, 1939, **15**, 67–69.—Permeability in darcys is defined as the velocity in cu. cm./sec. of a fluid of viscosity 1 centipoise flowing through a porous material of cross-sectional area 1 sq. cm. under a pressure of 760 mm. of mercury/cm. length of the porous material. Air is used as the fluid the velocity of permeation of which is measured, and the apparatus consists of a compressor delivering air to a reservoir, whence it passes through a control valve, through the chamber containing the porous material under test, and finally through a gas-meter to the atmosphere. The pressure drop across the solid is measured by means of manometers in the air line on each side of it. The volume of air flowing in a given time is measured, together with the pressure fall across the solid under test. From these figures, together with the viscosity of air and the dimensions of the material under test, the permeability is calculated in darcys. T. T. D.

560. Comparison between Direct Measurements and Closed Surveys with the Thyssen Gravimeter. S. von Thyssen. *Beitr. angew. Geophys.*, 1938, **7** (3), 218–229.—Gravimeter surveys may be made by two methods. In the first the instrument is returned to the base after each measurement in the field. This gives a constant check on instrument adjustment and eliminates errors. In the second method a closed survey is made, commencing and finishing at the base. Such a method is quicker, but the distribution of error amongst the intermediate stations is unknown. Surveys were therefore made by both methods in areas around Hanover in order to determine their relative accuracy. Different models of the Thyssen gravimeter were also used, and it was found that some, particularly those with a low-temperature constant, were more suitable than others for closed surveys. The results of the measurements are given in detail, and it is shown that the mean error with closed surveys is about twice that for direct measurements, the latter being 0·1–0·4 mg. S. E. C.

561. Nature of the Seismic-electric Effect. S. von Thyssen, J. N. Hummel and O. Rülke. *Beitr. angew. Geophys.*, 1938, **7** (3), 209–217.—In a continuation of research on this effect experiments were made with an electrolytic cell, keeping the voltage constant. Platinum wire was used for the electrodes and dilute sulphuric acid for the electrolyte. In order to investigate the effect of variation in frequency of vibration, the cell was mounted on an electrically driven shaking machine. It is shown that the curves given by measurements of the effect do not reproduce exactly the mechanical vibrations. The origin of the effect must be sought in the phenomenon of polarization, and the effect of mechanical vibration and current strength is discussed. S. E. C.

562. Frequency of Error Curves as Criteria of Accuracy of Measurement and their Application to the Thyssen Gravimeter. F. Lubiger. *Beitr. angew. Geophys.*, 1938, **7** (3), 230–244.—The gravity anomalies given by the Thyssen gravimeter are differences between the value of gravity at two stations, and the consideration of the errors involved is therefore not that of individual errors, but of differences of errors. This must be taken into account when calculating the frequency of errors. Knowledge of the mean error is important to the geologist, who must apply the measured gravity anomalies to his need. From the point of view of the development of the instrument, however, it is of great importance to know what are the various elements comprised in the mean error. These elements enter into the structure of the curve showing frequency of error, and such a curve will show whether the normal errors are overlain by a series of systematic errors. Curves were drawn for a number of Thyssen gravimeters, and these were all similar and showed secondary maxima. This indicates systematic errors, the origin of which can then be investigated, and the accuracy of the instrument improved. S. E. C.

563. Density Determinations on Rocks from the German Oil Areas. F. Breyer. *Beitr. angew. Geophys.*, 1938, **7** (3), 245–259.—Density determinations were made on core samples, 50–250 gm. in weight, taken where possible at 10 m. intervals. It must be noted that determination of true specific weight, which involves the fluids naturally occurring in the pores of the rock, is rendered difficult by the action of the drilling mud, etc., but it is considered that only small inaccuracies are involved by neglect of these factors. Cores were taken from wells in three areas: the South Hanover oilfields, the Lower Elbe area, and Mid Baden. In all cases an increase in density with depth is the general condition, but this is not solely a function of depth of burial. The factors involved are the mineralogical and chemical composition of the rock, its porosity, the pressure of the overburden, and the orogenic pressure. These points are discussed with particular reference to the samples in question. Age is not the cause of the higher densities, but it is favourable to their development. The general reason for density differences in sedimentary rocks is not so much variations in their chemical composition as in their porosity. However, the difference between the principal types is relatively small. S. E. C.

564. Geophysical Prospecting with the "Geoskop." L. Waagen. *Bohrtech. Z.*, 1939, **57** (1), 5–7.—Ordinary geophysical methods involve measurements at fixed stations, and, as a result, surveys take several weeks to carry out, and then follows at least an equal length of time during which calculations must be made. These methods are therefore slow and costly, and a personal factor may enter into the interpretation. With the "Geoskop" apparatus measurements are continuous and a direct evaluation of the recorded values is obtained without long calculation. A directional electric field is generated in the earth, and the variations in this field, due in part to the structure and in part to the various materials present underground, are detected. The work is apparently simple, but a skilled personnel is needed to handle the extremely sensitive apparatus and to interpret the curves. Certain preparatory work is necessary before the commencement of a survey in order to find a neutral point—a place where normal values are obtained—for the start. The zero of the instrument may be adjusted so that maximum detail can be obtained as required in either positive or negative values. Interpretation depends on a recognition of the significance of the maxima and minima of the curves. It is claimed that the presence of minerals as well as structure is shown, and a number of actual examples in faulted areas are discussed. S. E. C.

Drilling.

565. Blasting in Modern Deep Well Drilling. R. Feutchtinger. *Petrol. Z.*, 1939, **35**, 4–5.—Ready-manufactured blasting-cartridges for deepening and clearing wells are now available in Germany. Their use is demonstrated in several examples of actual drilling, including the loosening of jammed casings. E. W. S.

Transport and Storage.

566. Cellulose Containers (for Lubricating Oil). K. O. Müller. *Oel u. Kohle*, 1939, **15**, 151–153.—It was required under the four-year plan that the metal cans used in marketing motor lubricating oils should be replaced by containers made of a material produced entirely in Germany. It was suggested that cellulose be used for this purpose, and the military authorities laid down the conditions as to the mechanical strength, nature of impregnating material, and type of stopper required. A container was developed which satisfied all these requirements, but it was decided that the long-fibred cellulose from which it had been manufactured could not be used, as the wood from which it was derived was largely imported. It was further decided that the containers must be manufactured from cellulose recovered from waste paper.

These difficulties, however, have been overcome, and cellulose containers, packed in a holder taking ten, and stored under the bonnet of a car, stood up remarkably well to an arduous journey of 5000 km. over roads and across country. T. T. D.

567. Varnished Containers for Liquid Fuels as Substitutes for Galvanized Drums and Barrels. Anon. *Petrol. Z.*, 1939, **35**, 58.—The reason for the ban in Germany on

zinc for coating containers for liquid mineral oil products is not only the shortage of zinc in that country, but the fear that the deposits of zinc ores in the world as a whole will be exhausted in the near future. On the other hand, it is stated that an output of 200,000 tons of zinc per year from German sources will be possible in a few years. The new coating material is proof even against strong solvents like the German motor fuels, *i.e.*, mixtures of petrol, benzol, and different alcohols. The varnish can be manufactured from German raw materials in unlimited quantities. E. W. S.

Crude Petroleum.

568. Patents on Crude Petroleum. P. R. Hersham. U.S.P. 2,153,560, 11.4.39. Appl. 7.6.34. Desalting and demulsifying oils by treating them with a mixture of sodium naphthenate, formaldehyde, and glycerine at 135° F. in a closed system under pressure, and then recovering the separated oil from the brine.

M. De Groote and L. L. Faure. U.S.P. 2,153,744, 11.4.39. Appl. 28.2.38.

M. De Groote. U.S.P.P. 2,153,745 and 2,153,746, 11.4.39. Appl. 28.2.38. M. De Groote, B. Keiser, and C. M. Blair, Jr. U.S.P.P. 2,154,422 and 2,154,423, 18.4.39. Appl. 12.8.38. Demulsifying agents for breaking petroleum emulsions of the water-in-oil type. W. S. E. C.

Gas.

569. Patent on Gas. Board of Trustees of University of Illinois. E.P. 501,840, 1.3.39. Appl. 1.6.37. Removal of SO_2 from gases by absorbing the SO_2 in an aqueous solution of a soluble sulphite and a soluble bisulphite and then treating the solution with a metallic oxide, *e.g.*, of Ca, Mg, Zn, Sr, Ba, Pb, or Cd, capable of forming an insoluble sulphite, which is removed and the solution neutralized for treating the fresh gaseous mixture. W. S. E. C.

Cracking.

570. Insulating Refractory Gaining Preference in Cracking Furnace Construction. M. G. Van Voorhis. *Nat. Petrol. News*, 8.3.39, **31** (10), R. 82.—Much simpler and lighter furnace construction is possible by the use of the recently introduced insulating refractories. These materials are of composition similar to that of standard firebrick, but by the aeration of the clay before firing their thermal conductivity, weight, and heat capacity are only one-third to one-fourth of that of ordinary firebrick. The reduction in weight permits much lighter foundation construction, whilst their accurate and standard size and shape allow of accurate designing and the elimination of special shapes. Sizes are said to be so accurate that a tight wall can be constructed without bonding cement. The mechanical strength of insulating refractories is much lower than that of standard firebrick, but this is claimed to be no disadvantage in general. An alternative method of construction consists of lining the furnace with 3–4 in. of ordinary refractory backed with 2 in. of insulating material, such a wall being claimed to be as efficient as a 9-in. insulating refractory wall. H. G.

571. Cracking of Paraffin Wax on Aluminium Chloride in the Nascent State. H. Koch and H. Steinbrink. *BrennstChemie*, 15.4.39, **20** (8), 147–152.—Tests have been made to check a method given by Otin and Dima for the cracking of synthetic or natural solid paraffin wax to gasolines containing detectable quantities of aromatics. Contrary to the assertion of the said authors, in the fractions of the cracking gasolines boiling below 120° C. neither benzene nor toluene could be found.

Under the influence of activated Al and HCl, cracking gasolines were formed from paraffin wax, partly containing, besides paraffin hydrocarbons, considerable quantities of alkyl chlorides, which amounted in certain fractions to 15–17%. During fractionated distillation of these gasolines part of the alkyl chlorides decomposed to olefine. The remainder was converted into olefine by treatment with alcoholic potash.

The pure aliphatic nature of the cracking products was proved by catalytic hydrogenation of a fraction distilling between 70° and 90° C.

The present investigations showed no fundamental difference between the action

of $AlCl_3$ in the nascent state and that of the same when already formed, on the constitution of gasolines obtained by cracking solid synthetic or natural paraffin wax.
L. R.

572. Catalytic Aromatization of Aliphatic Hydrocarbons. H. Koch. *BrennstChemie*, 1.1.39, **20** (1), 1–9.—Methods similar to those given in Ital. Patents Nos. 351,078 and 352,747 on catalytic aromatization of aliphatic hydrocarbons were applied to Kogasin fractions. Vanadium and chromium oxide, both on aluminium oxide, were used as catalysts. Based on investigations by Kasansky and Plate, the behaviour of heptene, *n*-heptane, and *n*-octane was examined when passed over platinum on active carbon between 310° and 350° C. Fractions of charcoal-adsorption gasoline boiling above 100° C. were aromatized by exposure for 5 sec. to 520° C. over a vanadium–aluminium oxide catalyst. A Kogasin fraction distilling between 150° and 300° C. was passed over a chromium–aluminium oxide catalyst at 500–510° C. with 3–4 sec. contact period.

Results of the tests show, in agreement with previous examinations, that it is possible, with suitable catalysts, to carry out a deep-seated molecular conversion of aliphatic hydrocarbons into aromatic. Optimum temperatures and periods of contact depend on size and configuration of the hydrocarbon molecules. Consequently, similar to recent developments in non-catalytic cracking, optimum results of aromatization can be expected only with compounds of a high uniformity or with narrow-boiling-range fractions. L. R.

573. Patents on Cracking. J. W. McCaffrey. U.S.P. 2,149,854, 7.3.39. Appl. 6.1.32. Cracking of hydrocarbon oils to produce a residue and vapours which are fractionated to condense an intermediate product heavier than gasoline, and a lighter fraction which is finally condensed to form gasoline distillate. The gasoline distillate is re-formed, the re-formed distillate recovered, and the gases and the residue from the cracking are hydrogenated independently. The distillates from the hydrogenation are combined with the distillate from the cracking for re-forming.

T. C. Heisig. U.S.P. 2,150,119, 7.3.39. Appl. 10.10.36. Cracking of asphaltic oil in which a propane solvent is mixed with heavy cracking stock to precipitate asphalt, partly removing the solvent, and subjecting the remainder of the solvent and oil to vapour-phase cracking.

O. H. Dawson. U.S.P. 2,150,363, 14.3.39. Appl. 1.12.34. Preparation of a lubricating oil dye from cracked tar.

E. J. Houdry. U.S.P. 2,150,923 and 2,150,924, 21.3.39. Appl. 18.4.35. Catalytic conversion of hydrocarbons by means of adsorbent catalysts, *e.g.*, aluminium oxide or silicate.

L. de Florez. U.S.P. 2,151,386, 21.3.39. Appl. 16.4.29. Improved furnace for use in cracking operations. W. S. E. C.

Hydrogenation.

574. Patent on Hydrogenation. M. Pier, W. Simon and P. Jacob. U.S.P. 2,154,527, 18.4.39. Appl. 28.12.35. Catalyst for hydrogenation of carbonaceous substances, consisting of a bleaching earth, the activity of which has been increased by treating it, prior to its application, with an agent selected from the group consisting of F, HF, or other compounds of fluorine capable of corroding siliceous material. The catalyst is then washed to remove the fluorine-containing agent. W. S. E. C.

575. Patents on Dehydrogenation. Society Chemical Industry, Basle. E.P. 501,897, 7.3.39. Appl. 20.7.38. Dehydrogenation of aromatic nuclei—*i.e.*, formation of condensed ring systems by intramolecular dehydrogenation of compounds with the aid of aluminium chloride and a hydrogen acceptor—*i.e.* an aromatic nitro-compound which, in addition to the nitro-group contains one other nitro-group or at least one hydroxy-sulpho-, or carboxy-group.

J. C. Morrell and A. V. Grosse. U.S.P. 2,152,908, 4.4.39. Appl. 11.5.36. Dehydrogenation of paraffinic hydrocarbons by splitting off H_2 in the presence of aluminium or magnesium oxide, together with a small amount of an oxide of praseodymium. W. S. E. C.

Polymerization.

576. Catalysis in the Petroleum Industry. V. N. Ipatieff. *IIme Congrès Mond. Pétrole*, 1937, **2** (Sect. 2), 455–460.—Paraffin hydrocarbons remaining after polymerization of olefines in cracked gases can be dehydrogenated to olefines, which can be again polymerized.

Gaseous olefines can also be converted into viscous lubricating oils. Unsaturated hydrocarbons, obtained from cracked gases and from natural gas, can be converted into aldehydes, ketones, alcohols, glycols, acids, ethers, etc. The author has produced catalysts which yield exclusively polymer olefines.

If olefines are polymerized in the presence of *ortho*-pyrophosphoric acids as catalysts, only polymeric olefines are produced. Thus propylene polymerized at a temperature of 200–225° C. yields a mixture of di-, tri-, and tetra-polymers. The same process at higher temperatures yields considerable quantities of paraffins, naphthenes, and aromatics.

Systematic study should lead to the discovery of catalysts capable of directing polymerization towards specific products. The present and future importance of catalysts in the petroleum industry is discussed. M. M. L.

577. Composition of the Primary Polymerization Products of Propene and Butenes. H. Hogg, J. Smittenberg and G. H. Visser. *IIme Congrès Mond. Pétrole*, 1937, **2** (Sect. 2), 489–495.—The authors have attempted to follow the reactions involved when gaseous olefines, propene, and the butenes are polymerized by passing over a phosphoric acid catalyst under mild conditions. Since the polymerization of olefines produces mainly other olefines, the determination of their structure requires chemical analytical methods. The authors have chosen hydrogenation to paraffins followed by analytical rectification.

The following general conclusions are reached :

(*a*) Quaternary C atoms cannot take part in coupling reactions; if they are formed, rearrangement to tertiary C atoms ensues.

(*b*) Coupling between similar C atoms occurs only in a very slight degree, or not at all.

(*c*) Coupling between a tertiary and a primary C atom takes precedence of any other possible combination.

(*d*) Besides main products formed in accordance with (*a*) to (*c*), secondary products are formed, especially at high temperatures, by more radical crackings, rearrangement, and polymerization. W. P.

578. [Johnson] "Midget" Polymerization Plant Boosts Gasoline Yield Three Per Cent. W. J. Leenhouts. *Nat. Petrol. News*, 8.3.39, **31** (10), R. 92; *Refiner*, 1939, **18** (3), 112.—In the plant described stabilizer tops containing 45–47% propene and butenes are compressed to 500 lb. and passed at 180° F. to the furnace, where the temperature is raised to 325–400° F. From the furnace the gases pass to two catalyst towers 30 in. diameter, 15 ft. 6 in. high, packed with solid phosphoric acid catalyst and operated at 500 lb. pressure. The temperature rise in the first tower is 90° F. and in the second 20° F. A Griscom Russell polymer condenser and a stabilizer tower follow the catalyst towers. The gasoline is stabilized to 10–30 lb. Reid V.P., according to the demand. The blending octane value of the product is 110–120. H. G.

579. Patents on Polymerization. A. L. Mond and Universal Oil Products Co. E.P. 501,776, 6.3.39. Appl. 9.11.37. Polymerization of hydrocarbon mixtures containing propylene, *iso*butylene, and normal butylenes in three stages. Polymerization is carried out in the first stage at 20–66° C. under 3·4–10 atm. pressure in the second stage at 66–121° C. and 10–24 atm. pressure, and in the third stage the propylene is sub-

jected to the action of a solid phosphoric acid catalyst at 205–260° C. and under 6·5–20 atm. pressure.

G. W. Johnson and I. G. Farbenindustrie A.-G. E.P. 501,669, 3.3.39. Appl. 17.9.37. Manufacture and production of interpolymerization products by polymerizing mixtures of fumaric di-esters and *iso*butylene in an aqueous emulsion in the presence of catalysts.

G. W. Johnson and I. G. Farbenindustrie A.-G. E.P. 502,475, 15.3.39. Appl. 15.7.37. Polymerization of olefines into liquid hydrocarbons in which the catalyst carrier is impregnated with a solution of a metal salt in phosphoric acid.

J. E. Westenberg. U.S.P. 2,154,795, 18.4.39. Appl. 15.6.38. Method of controlling temperatures in exothermic reactions—*e.g.* polymerization reactions.

W. S. E. C.

Synthetic Products.

580. Patent on Synthesis. H. Dreyfus. E.P. 500,264, 6.2.39. Appl. 5.8.37. Manufacture of hydrocarbons by the reaction of CO and H_2 in the presence of hydrogenating catalyst consisting of Co-thoria, the absolute pressure in the reaction zone being normally above 0·5 atm., but is periodically reduced to below 0·5 atm. W. S. E. C.

Refining and Refinery Plant.

581. Structure and Origin of Natural Earths Suitable for the Decoloration of Mineral Oils. J. de Lapparent. *IIme Congrès Mond. Pétrole*, 1937, **2** (Sect. 2), 559–568.—The classification of decolorizing earths based on their mineralogical character and molecular structure has been attempted by the author, who considers such earths to be argillaceous earths, the essential constituents of which are, either singly or in mixtures, the three argillaceous minerals "Kaolinite," "Attapulgite," and "Montmorillonite."

From considerations of the structural formulæ of these three argillaceous minerals, the author shows that the decolorizing activity or possibility of activation by physico-chemical means is dependent on the combination of Si ions and –OH ions in the molecular structure, and is in every case independent of the nature of the earth. Kaolinite is stated to be active only when in the form of anauxite and montmorillonite, to lose its activity when heated, owing to the destruction of the $SiMg(OH)_6$ grouping which gives the Si ion–OH ion grouping necessary for activity. The stability of attapulgite to heat is explained by its structure.

The author discusses naturally occurring earths as found *in situ*, and attempts to establish the geochemical phenomena which have occasioned these minerals.

L. W. C.

582. Selection of Naturally Occurring and Activated Decolorizing Earths by Physico-Chemical Methods. C. L. Alexanian. *IIme Congrès Mond. Pétrole*, 1937, **2** (Sect. 2), 569–573.—Dehydration curves and X-ray defraction spectra give a quick and conclusive means of identification and selection of decolorizing earths.

From these data the author has deduced practical rules for the choice of the naturally occurring earths, and explains their activation by partial dehydration. M. I.

583. Influence of Moisture on Decoloration of Lubricating Oils by Earths. L. Delemar, R. Navarre and J. Fischer. *IIme Congrès Mond. Pétrole*, 1937, **2** (Sect. 2), 575–581.—The maximum colour absorption of an activated earth at temperatures below 100° C. is reached when the moisture content of the earth is in the neighbourhood of 10%, whilst at temperatures above 100° C. the maximum is reached at about 20% moisture. These figures vary slightly with the origin of the earth and the method of activation.

This effect of moisture on colour absorption is attributed to the formation of a protective layer of steam on the small particles of earth, and also to the increased surface of absorption due to the disintegration of the larger earth particles by steam bubbles.

The colour-absorbing capacity of the earth is further increased by the passage of steam through the oil during the earth treatment, and inert gases such as nitrogen or carbon dioxide give even better results. M. I.

584. Production of Lubricating Oils by Direct Refining of Crudes by Means of Absorbents. C. Creanga. *IIme Congrès Mond. Pétrole*, 1937, **2** (Sect. 2), 591–596.—The author presents a method for the production of lubricating oils by direct refining of undistilled crude oils, achieved by the use of activated earth. By adding a large excess of absorbent to the crude (150–250%), oil is distributed in a thin film on the absorbent. Extraction with gasoline of low aromatic content dissolves the oil, leaving asphalt, resins, and acids adsorbed in the absorbent.

The gasoline is evaporated and the extracted oil can be distilled to any grade. Quantitative separation and recovery of the various reagents are claimed. M. I.

585. Waste Products Successfully Burned as Fuel at Oil Refineries. A. L. Wilson. *Nat. Petrol. News*, 8.3.39, **31** (10), R. 88.—The necessity of burning large volumes of non-merchantable by-product fuels, such as tank bottoms, acid tars, and sludges, has resulted in the designing of both suitable furnaces and burners. The steam-injection-type burner is so efficient that most fuels of this nature are burned cold or at relatively low temperatures. One burner used successfully operates at 50 lb. pressure on fuel at 110° F. Furnace design usually follows accepted practice, and must approach that suitable for good-quality fuel by allowing adequate volume for maximum requirements. The gas must be kept highly heated and afforded time and space in which to burn completely before reaching heating surfaces. Lead-lined tanks equipped with steam jets for agitation and the maintenance of pumping consistency are usually used for storage. H. G.

586. Reduction of Organic Sulphur Compounds by Oil Washing. C. Cooper. *Chem. and Ind.*, 1939, **58**, 155–159.—The four constituent groups of sulphur compounds which may be present in coal gas are: (1) carbon disulphide, (2) mercaptans, (3) thiophene, (4) carbon oxysulphide (and possibly carbon monosulphide). The first three are known in the liquid form when isolated, but the fourth is a gas, and, on a commercial scale, the carbon disulphide which may account for about 60% of the sulphur compounds present, controls the oil-to-gas ratio required. This is normally 25 gals. per 1000 cu. ft. of gas treated at normal temperatures.

The author describes a commercial process for sulphur extraction employed in this country, where, after leaving the washer, the oil is preheated by an oil to oil heat exchanger, followed by an oil to vapour heat exchanger, finally arriving in the still at 100° C. This process uses from 0·4 to 0·5 lb. of steam per gallon of oil, and recovers 1 gal. of benzole with 50 lb. of steam. Representative working conditions are described which indicate that sulphur content is reduced from 20–30 grains to 5½–9 grains.

Using vacuum distillation by working under a pressure of 4–5 lb. absolute in the still, the life of the absorption oil is increased and sludge formation is avoided. Operating conditions show that sulphur may be reduced from 33 grains to 8 grains, using 30 gals. of oil per 1000 cu. ft. of gas, with a steam consumption of 0·36 lb. per gallon of oil.

The author discusses the case where maximum benzole yield is not required, and shows how it is possible to obtain good sulphur removal under this condition.

Lower washing temperatures and higher operating pressures have been considered, but the increase in capital and power costs, and the inadvisability of introducing extra chemical engineering equipment, have so far ruled out these methods.

W. E. J. B.

587. Reclaiming Lubricating, Cutting and Cooling Oils. F. Deitmers. *Petrol. Z.*, 1939, **35**, 33–35.—Considerable economies in cutting and cooling oils may be made by the installation of a relatively small centrifuge. With a machine of 1 kw. input and 3-kw. for the heating of the oil, it is possible to treat and clean several tons of oil per day, practically without labour cost. E. W. S.

588. Patents on Refinery Plant. W. W. Myddleton. E.P. 501,441, 22.2.39. Appl. 22.7.37. Treatment of steel pipes and containers of chemical reaction chambers to remove sulphur compounds, by allowing hydrogen to flow continuously through them at atm. pressure.

H. Hoppers' Industrieele Mij., N.V. E.P. 501,765, 6.3.39. Appl. 6.9.37. Apparatus for the supply and withdrawal of heat for granular material in chemical, especially catalytic, furnaces, etc.

E. Solcia. E.P. 502,057, 10.3.39. Appl. 27.1.38. Protective coatings for tanks for liquid fuels exposed to the risk of perforation, consisting of a multiple layer envelope, an intermediate layer formed of spongy rubber only slightly vulcanized and containing substances capable of causing the spongy rubber to swell when brought into contact with liquid hydrocarbons, and an interior layer comprising an anti-rust substance adhering strongly to the metal walls of the tank. W. S. E. C.

Chemistry and Physics of Petroleum.

589. Fractionation of Mineral Oils. M. Louis. *IIme Congrès Mond. Pétrole*, 1937, **2** (Sect. 2), 117–121.—The author used physical methods to study distillates of Alsatian crude with a view to determining the principal type of molecules present. The methods used were: (1) distillation using a cathodic vacuum, (2) fractionation by acetone, and (3) a combination of (1) and (2). Mononaphthenes with long side-chains and pentanaphthenes with short side-chains were both found with molecular weights between 400 and 500. J. K.

590. Constitution of Lubricating Oils. J. Müller, S. Pilat, and W. Szankowski. *IIme Congrès Mond. Pétrole*, 1937, **2** (Sect 2), 123–125.—Elimination of sulphonic groups from the sulphonic acids formed in acid refining of mineral oils yields oils of high refractive index and high specific gravity with a C : H ratio of 1 : 1. These oils are substantially aromatic and free from naphthenic constituents. Naphthenic oils are produced by the reduction of high-molecular naphthenic acids to hydrocarbons. Attempts to prepare oils of purely paraffinic structure by systematic extraction from a Pennsylvanian oil yielded products which proved to be cyclic, and it is concluded that *iso*-paraffins, if present at all, are present in very small quantities. W. P.

591. Synthesis of Naphthenic Acids. J. von Braun. *IIme Congrès Mond. Pétrole*, 1937, **2** (Sect. 2), 127–131.—Naphthenic acids are generally either monocyclic, $C_nH_{2n-2}O_2$ or bicyclic, $C_nH_{2n-4}O_2$. Syntheses of monocyclic types are described starting with adipic acid, geranic acid, and *cyclo*pentadiene. Synthesis of bicyclic acids is more difficult, but was achieved from methylated chlorine compounds of tetraline and indene. W. P.

592. Characteristics of Crude Oils. M. Louis. *IIme Congrès Mond. Pétrole*, 1937, **2** (Sect. 2), 133–138.—Various crudes were distilled at atmospheric pressure at 250° C., and the residues obtained were then distilled under cathodic vacuum yielding lubricating-oil fractions and residues.

On each lubricating-oil fraction the specific gravity, refractive index, viscosity at 20° C., and viscosity index were determined, and are expressed graphically. A. F. P. S.

593. Heavy Water in Petrols. A. Maillard. *IIme Congrès Mond. Pétrole*, 1937, **2** (Sect. 2), 139–140.—The percentages of deuterium present in two gasolines of different origin have been estimated by the combustion of the gasoline and examination of the water produced. The water was purified by repeated distillation, concentrated by electrolysis, and its freezing point and refractive index were determined, a blank experiment being carried out with conductivity water.

Deuterium contents of 0·94 part per 1000 and 0·72 part per 1000 are given for the two gasolines examined. J. C.

594. Refractometric Studies on Hydrocarbons. W. Bielenberg. *IIme Congrès Mond. Pétrole*, 1937, **2** (Sect. 2), 141–145.—The refractive index (n_D) is usually determined in the examination of a mineral oil, and can be used to obtain information on the chemical character of the oil by means of a mol. wt.–n_D curve in combination with other figures, such as density, parachor, etc. Since the b.pts. of isomers often differ considerably, the use of a b.pt.–n_D curve is suggested. Similarly dispersion ($n_F - n_C$) is sensitive to differences in constitution, and valuable information can be obtained from curves of dispersion–b.pt. and b.pt. $\frac{n_D}{n_F - n_C}$. Diagrams of these for the different classes of hydrocarbons are given. R. G. G.

595. Application of Raman Spectrum to Study of Gasoline. A. Andant. *IIme Congrès Mond. Pétrole*, 1937, **2** (Sect. 2), 147–150.—The author finds that, for mixtures of hydrocarbons which do not react together, the characteristic Raman rays given by each constituent are not displaced, and that their relative intensities vary according to the proportions in the mixture.

This property of the Raman spectra was applied to gasolines of various origins, and permitted the identification of a number of individual constituents.

The practical application of this method is said to be limited only by the lack of knowledge of the Raman spectra of pure hydrocarbons. T. M. B. M.

596. Analysis of Gasolines and Oils by Means of Infra-red Absorption Spectra. J. Lecomte. *IIme Congrès Mond. Pétrole*, 1937, **2** (Sect. 2), 151–162.—The experimental technique for the study of infra-red absorption spectra of hydrocarbons is described. The dispersion of the spectroscope must be as great as possible, and certain portions of the spectrum of each hydrocarbon are particularly important.

Pure hydrocarbons of various series were studied, and it is shown that, by means of infra-red absorption spectra, isomers and homologues can be distinguished. Mixtures were also examined, and the author indicates that infra-red absorption spectra can be made to yield information as to the composition of a mixture during distillation, etc.

The author discusses the interpretation of the results obtained, and states that it may be possible to forecast the infra-red absorption spectrum of a hydrocarbon from its chemical composition. T. M. B. M.

597. Nitration of Paraffin Hydrocarbons. T. Urbanski and M. Slon. *IIme Congrès Mond. Pétrole*, 1937, **2** (Sect. 2), 163–167.—Paraffin hydrocarbons may be directly nitrated by nitrogen dioxide at temperatures above 100° C. The hydrocarbon vapour mixed with dry NO_2 is passed through a heated glass tube filled with glass or porcelain rings, the product cooled, and residual NO_2 and NO removed by a current of air. The nitrated materials are separated by vacuum distillation.

Hydrocarbons from natural gas and petrol, ranging from propane to *n*-nonane, give from 30% to 80% yields of nitro-compounds, consisting mainly of the mononitro- and primary dinitro-hydrocarbons in the ratio of approximately 2 : 1. The optimum temperature conditions range from 190° C. to 215° C. In the case of methane only traces of nitro-compounds are obtained even at 300° C.

*cyclo*Hexane gives a 28% yield of mononitrohexane at 195–200° C. W. L. P.

598. Physiological Properties of Petroleum Hydrocarbons. R. Fabre. *IIme Congrès Mond. Pétrole*, 1937, **2** (Sect. 2), 169–173.—The physiological action of the various commercial petroleum products has been studied. Gasoline and the light fractions have an anæsthetic effect as well as paralysing the vasomotor nerves, the effects varying with the type of molecule contained in the crude. Benzene and *cyclo*paraffins are very toxic, whilst the straight-chain aliphatic compounds are the least harmful.

Heavy fractions, such as lubricating oils, produce various skin diseases such as acne, eczema, and dermatitis, stated to be due to small amounts of impurities present. As a prophylactic measure, the author stresses the need among workers of a strict attention to body hygiene. J. K.

599. Effect of Metal Oxides on Paraffin Hydrocarbons. G. Egloff and H. S. Bloch. *IIme Congrès Mond. Pétrole*, 1937, **2** (Sect. 2), 461–476.—The experimental work on the conversion of hydrocarbons into more useful compounds by thermal reaction involving metallic oxide catalysts is collated, and the effect of the oxides of chemically similar metals is compared, the oxides being grouped according to the relationships of the periodic system; the physical as well as the chemical properties of the oxides and their catalytic effect on the decomposition of hydrocarbons are considered, and reactions in the presence of clays, pumice, and refractories are also included.

The catalysts are divided into five classes: those which catalyse (1) the decomposition of methane to its elements; (2) the conversion of methane into olefins, acetylene, and aromatics; (3) the dehydrogenation of paraffins to olefins; (4) the dehydrogenation of higher paraffins to cyclic compounds; and (5) the cracking of paraffins to shorter-chain compounds.

The action of promoters is dealt with, and a comprehensive bibliography is included.

J. L. E.

600. Density, Compressibility, Expansion of Light Hydrocarbons. A. P. Van der Vet. *IIme Congrès Mond. Pétrole*, 1937, **2** (Sect. 2), 515–521.—By using a steel bomb as a pyknometer, the density, compressibility, and expansion of liquid propane, butane, and *iso*butane were determined.

Blends of butane and *iso*butane showed no contraction in volume, and their properties were additive. Contraction occurred on blending propane with butane or *iso*butane, necessitating a correction in calculating the density of the blend from those of the components. Details of this correction are given. T. M. T.

601. Absorption and Vaporization. R. Fallah. *IIme Congrès Mond. Pétrole*, 1937, **2** (Sect. 2), 535–541.—Gas-absorption formulæ are deduced and a nonogram is presented for calculation of batch absorption, flash vaporization, and compression of solutions. W. P.

602. Addition of Hydrochloric Acid to Unsaturated Hydrocarbons at Low Temperatures. J. J. Leendertse and H. I. Waterman. *IIme Congrès Mond. Pétrole*, 1937, **2** (Sect. 2), 547–549.—Mono-olefines with from 4 to 12 carbon atoms were treated with dry hydrogen chloride gas at temperatures of the order of minus 78° C. in the absence of a catalyst.

The *iso*-olefines in which the side-chain emanated from one of the carbon atoms of the olefine group were very reactive, giving rapid and almost complete formation of corresponding tertiary chloride. The mono-olefines of the –HC = CH– type were practically inert, but in the presence of a catalyst, such as aluminium chloride, reaction took place, giving, in addition to the monochloride, a mixture of monochlorides of higher molecular weight.

This reaction at minus 78° C. can be used for the preparation of tertiary chlorides and for the separation of a mixture of olefines into its reacting and non-reacting constituents. T. M. T.

603. Aluminium Chloride Reactions on Unsaturated Hydrocarbons. S. S. Nametkin and M. G. Rudenko. *Oil Gas J.*, 9.3.39, **37** (43), 52–57. (Translation from *J. Gen. Chem. U.S.S.R.*, 1937, **7** (69), No. 3–4, pp. 763–775.)—The action of Al_2Cl_6 on the higher unsaturateds—amylene, caprylene, and *cyclo*hexene—has been studied, and it has been found that a more pronounced destructive polymerization and hydropolymerization occurs than in the presence of concentrated H_2SO_4. Two layers are formed, the upper containing unsaturated polymers and saturated hydropolymers, and the latter partly resinified compounds resulting from dehydropolymerization. From *cyclo*hexene, the least reactive of the three hydrocarbons examined, were isolated an unsaturated pentamer-tetra*cyclo*-hexyl*cyclo*hexene- and the corresponding aromatic hydrocarbon—tetra*cyclo*hexylbenzene, presumably formed from the former by hydrogenation to the hydropolymer and subsequent dehydrogenation. It is concluded that the series of reactions undergone by unsaturated hydrocarbons in the presence of Al_2Cl_6 is (1) polymerization, (2) dehydropolymerization of a part

of the polymer to highly unsaturated polymers forming complex compounds or aromatic hydrocarbons in the lower layer, and (3) hydrogenation of the remainder of the polymer with the hydrogen released during dehydropolymerization to form saturated hydropolymers.

The method of preparation and analyses of the fractions resulting from the hydropolymerization of amylene, caprylene, and *cyclo*hexene are given. C. L. G.

604. Ethylene Hydrocarbons Subjected to Hydro- and Dehydro-polymerization. S. S. Nametkin, L. N. Abakumovskaya and M. G. Rudenko. *Oil Gas J.*, 9.3.39, **37** (43), 52. (Translation from *J. Gen. Chem. U.S.S.R.*, 1937, **7** (69), No. 3–4, pp. 759–762.)—In an examination of the reaction between ethylene and concentrated H_2SO_4 it is shown that the stages consist of polymerization followed by hydrogenation, in which saturated hydropolymers are formed, and finally by a reversed transformation—dehydropolymerization in which highly unsaturated compounds are formed. Hydro- and dehydro-polymerization take place when sulphuric acid is substituted by a catalyst, *e.g.* Al_2Cl_6. Two types of conversions are possible: (1) polymerization, which occurs in the presence of dilute H_2SO_4 or $ZnCl_2$ at low temperatures; (2) hydro- and dehydro-polymerization of unsaturated hydrocarbons in the presence of concentrated H_2SO_4 leading to the formation of hydrodimer, hydrotrimer, and saturated hydropolymer, the remaining hydrogen being used in the dehydrogenation of initial unsaturated compounds. In the presence of phosphoric acid the dehydropolymerization results in the formation of aromatics. Thermal polymerization of ethylene at 330° at a high pressure gave a mixture containing 8% paraffins, 60% olefins, and 32% naphthenes, whereas the presence of phosphoric acid under the same conditions gave a mixture of 46% paraffins, 7% olefins, 21% naphthenes, and 26% aromatics. C. L. G.

605. Phase Equilibria in Hydrocarbon Systems Joule–Thomson Coefficients of Methane. R. A. Budenholzer, B. H. Sage and W. N. Lacey. *Industr. Engng Chem.*, 1939, **31** (3), 369.—The Joule–Thomson coefficient for methane was determined over the temperature range 70–220° F., and at pressures up to 1500 lb. per sq. in. The results, which are presented in graphs and tables, are compared with those calculated by other authors from p.v.t. measurements. Isothermal changes in enthalpy and compressibility factors are derived from the data and presented in tabular form. P. D.

606. Equilibria, Reaction Rates, and Yields in Unit Processes. R. H. Ewell. *Industr. Engng Chem.*, 1939, **31** (3), 267–273.—Yields in chemical reactions are determined by two factors—namely, the equilibrium state and the rates of all the reactions concerned. The necessity for clearly defining and separating the effect of these factors is emphasized. Thermodynamical reasoning can state definitely what the final equilibrium state obtained will be, but it gives no information concerning the rate of attaining the equilibrium state in a chemical reaction. The thermodynamics of some industrially important unit processes are discussed, including halogenation, hydration hydrogenation, nitration, and isomerization. Important new sources of thermodynamic data and new methods of estimating approximately the heat, entropy, and free energy changes of reactions in these cases where exact data are not available are discussed. The importance of reaction rates to yields, and the relation of activation energy and reaction mechanism to the rate are indicated, including a discussion of the mechanisms of hydrogenation, addition, and substitution, chlorination, vapour-phase hydrolysis and several other unit-processes. H. E. T.

607. Nitration of *iso*Pentane. L. W. Siegle and H. B. Hass. *Industr. Engng Chem.*, 1939, **31** (5), 648.—This paper deals with the nitration of *iso*pentane in the vapour-phase, evidence being obtained for the presence of each of the nitro-compounds which can be predicted by the free radicle theory of nitration. The theoretically possible free radicles derivable from *iso*pentane are: 2-methyl-1-butyl, 3-methyl-1-butyl, 3-methyl-2-butyl, 2-methyl-2-butyl, 2-butyl, 2-methyl-1-propyl, 2-propyl, ethyl, and methyl. Every nitroparaffin that is theoretically possible by addition of a nitro-group to these free radicles, has been obtained—*e.g.*, 2-methyl-1-nitrobutane, 3-methyl-1-nitrobutane (a mixture boiling at 164–165° C., not separated), 3-methyl-2-

nitrobutane (boiling at 155° C.) 2-methyl-2-nitrobutane (boiling at 150·5° C.), 2-nitrobutane, 2-methyl-2-nitropropane (a mixture boiling at 140° C., not separated), 2-nitropropane (boiling at 120° C.), nitroethane (boiling at 115° C.), and nitromethane (boiling at 101° C.). The pure compounds were separated by careful fractionation, but it was not found practicable to separate the two mixtures.

Acetone, identified by its 2 : 4-dinitrophenylhydrazone (m.pt. 127° C.) was obtained as one of the nitration products.

Nitromethane was identified by its b.pt. (99–100° C.) and by the formation of a red colour due to the presence of the sodium salt of methazoicic acid, when treated with sodium hydroxide.

2-Nitropropane, was identified by its physical constants, and the blue pseudonitrole colour test.

2-Nitrobutane and 2-methyl-1-nitropropane were proved to be present by the nitrolic acid and pseudonitrole test and by the boiling point of the mixture. The phenylthiourea derivative (m.pt. 100–101° C.) of 2-butylamine was obtained from the reduction product of the mixture. 2-Methyl-2-nitrobutane was identified by its boiling point (149·8° C. at 752·3 mm.) and by its insolubility in sodium hydroxide solution. 3-Methyl-2-nitrobutane, boiling at 154° C., was identified by the formation of a blue pseudonitrole when treated with alcoholic sodium hydroxide and sodium nitrite, with subsequent neutralization of the solution. H. E. T.

608. Detection of Phenolsulphonic Acids in the Products of the Interaction between Sulphuric Acid and Mineral Oils. S. Pilat and J. Sereda. *Przem. Chem.*, 1938, **22** (11–12), 459–463.—The sulpho-derivates of the phenols which occur in crude oil were isolated for the first time from products obtained by the treatment of mineral oils with sulphuric acid. After eliminating the sulpho group from mineral oil phenolsulphonic acids, phenols of a molecular weight of about 260 and a formula $C_{17}H_{26}OH$ were obtained.

It was proved that the " Ferri Colour Reaction " of mineral oil β-sulphonic acids, (*Petrol. Z.*, 1934, **30** (19), 1), is caused by the presence of mineral oil phenolsulphonic acids, and is characteristic of them.

Ferric salts of these acids dissolved in organic solvents give an intensive blue or green colour. Water-soluble mineral salts in solid form or water solution cause the disappearance of this colour. Under the influence of temperature and traces of water, the disappearance and reappearance of the colour take place, respectively.

Some of the changes which ferric salts of mineral oil phenolsulphonic acids undergo seem to indicate the participation of a hydroxyl group in reaction with $FeCl_3$, and that the phenomena of tautomerism and desmotropism take place. E. J. W.

609. Kinetics of the Oxidation of Methane. W. Staronka and L. Czerski. *Rocz. Chem.*, 1939, **19**, 259–276.—The rate of oxidation of methane was investigated by the flow method under atmospheric pressure and at temperatures of 460, 470 and 483° C. The volume ratio of methane to oxygen in the reacting mixture was equal to 2·2 and 1. The reaction proceeded in a supremax vessel (volume 1 litre, diameter 80 cm).

Among the products of oxidation, methanol and some peroxide, probably CH_3OOH, were found. These products had never been observed under these conditions. The change in the amounts of initial substances with time was followed by systematic chemical analysis.

The following statements are made :

(1) Among the products which appear at the beginning of the reaction, formaldehyde occurs always in larger quantities than methanol, which is inconsistent with the hydroxylation theory :

(2) The amounts of formaldehyde and methanol increase with the progress of the reaction, and attain maximum values of 0·5–0·8% and 0·8–1·4% of the initial reaction mixture, respectively. The total amount of these products in the early stages of the reaction corresponds to about 20–40% of methane transformed.

(3) The maximum amount of methanol increases with increasing methane to oxygen volume ratio and decreasing temperature.

(4) The oxidation of methane is stoichiometrically inhomogenous.

The results obtained support the theory that the oxidation of methane in unpacked vessels and in the absence of special contacts is a chain reaction of a mainly, but not completely, homogenous character.

The results are illustrated by a number of comprehensive tables and diagrams with English as well as Polish explanations. E. J. W.

Analysis and Testing.

610. Comparison of Methods for Determination of Iodine Values of Gasolines. M. Richter. *Oel u. Kohle*, 1939, **15**, 69–75.—The iodine (or bromine) values of five different types of gasoline (Deutsches Hydrierbenzin, Baku–Benzin, Toppbenzin, Deutsches Spaltbenzin and *cyclo*pentene) were determined by the Hanus, McIlhiney, Wijs, Hubl, and Kaufmann methods. In each case the effect of varying reaction time on the result was investigated by stopping the reaction after 15, 30, 60, and 180 min., with the object of discovering which methods reached a definite end point after 60 min.

From the results, which are illustrated by ten graphs and six tables, it was deduced that the most suitable method is that of Hanus, because it exhibits a definite end-point after a shorter reaction time than the others, and because it has the advantages of the titre of the iodine bromide solution remaining constant and of simplicity and reliability.

McIlhiney's method is not suitable for use on gasolines with a short reaction time. On the other hand, it can be used with success for investigation of constitution, as it is possible to estimate simultaneously the amounts of halogen added and substituted.

Wijs' method gives results of the same order of magnitude as does that of Hanus, but does not always give a definite end-point in the given reaction time.

Hubl's method, like that of McIlhiney, gives results rather low compared with the others, and again does not give a definite end-point in 60 min.

Kaufmann's method also fails for this last reason; the results obtained, however, are of the same order as those obtained by the methods of Wijs and Hanus.

T. T. D.

611. Evaluation of Diesel Fuels by Motor Methods. A. W. Schmidt and F. Kneule. *Oel u. Kohle*, 1938, **14**, 1034–1041.—Motor methods used in the testing of diesel fuels are outlined, and the method used by the authors is described in greater detail. Photographs are given showing the effect of varying the compression ratio on the shape of the pressure–time diagrams obtained with various fuels.

Diagrams are also given showing the dependence of ignition delay on compression ratio, and the effect on this relationship of the addition of amyl nitrite, paraffin, "Kogasin," and phenols (from a diesel oil derived from lignite). It is shown that the same effect is obtained by the addition of 40% paraffin, 15% Kogasin, or 1·5% amyl nitrite. 10% addition of phenols makes only a slight difference, but the effect increases more than linearly with increasing addition of phenols.

Curves were also determined for mixtures of cetene and α-methylnaphthalene, and of Kogasin and α-methylnaphthalene, so that, in routine tests, the expensive primary reference fuel, cetene, could be replaced by Kogasin, as a cheap secondary reference fuel.

The coking tendencies of the fuels were measured in the motor itself by heating the injector nozzles electrically to a fixed temperature (205° C., 225° C., and 260° C.), the observed property being the time taken for the power output of the engine to fall by 25%. This property is compared with the German army tests for diesel oils ("Gesamtverschmutzung," asphalt—and coke content), but no correlation can be deduced. Surprisingly good correlation, however, is obtained with the Conradson carbon residues, high values corresponding with rapid falling off in power of the engine.

T. T. D.

612. Torsion-cone Consistometer. M. H. Arveson and L. C. Brunstrum. *Oil Gas J.*, 30.3.39, **37** (46), 83.—The paper describes a torsion instrument for measuring the consistency of greases which it is claimed has certain advantages over the types of apparatus in common use to-day.

In this instrument the force necessary to push a disc through the grease is measured, and the result is expressed as consistency index defined as 100 × cube root of force in gm. required to force a disc 1 sq. cm. area moving at 18 mm./min. through a cup of grease 4 cm. diameter and 5 cm. deep at mid-point.

In the recommended type of instrument the cup is moved at a constant speed against the disc, and the force involved is balanced by a cone submerged in mercury.

Figures are given to demonstrate the accuracy and reproducibility of the consistometer, which has been used by the authors as a plant-control instrument for the past six years. D. L. S.

613. Evaporation Test for Commercial Butane. H. W. Van der Hoeven. *IIme Congrès Mond. Pétrole*, 1937, **2** (Sect 2), 523–526.—A 75-c.c. sample of the liquid butane is poured into a previously cooled graduated centrifuge tube. This tube, which is surrounded by an air-jacket, is immersed in a water-bath maintained at 85–100° C., and the sample allowed to evaporate. The temperatures, recorded on a thermometer immersed in the liquid butane, are noted after certain definite volumes have boiled off. The reproducibility of the individual readings is given as ± 0·2° C. This method is offered as an alternative to the N.G.A.A. method of distillation. T. M. T.

614. Estimation of Normal Butane and Isobutane in Mixtures. P. Woog, R. Sigwalt and A. Gomer. *IIme Congrès Mond. Pétrole*, 1937, **2** (Sect. 2), 527–533.—Isothermic compression of a pure gas below its critical temperature yields a volume pressure curve in which—

1. inclined portion corresponds to existence of a single phase—the gaseous phase;
2. a vertical portion corresponds to a mixture of the gaseous and liquid phases; and
3. a very slightly inclined portion corresponds to the liquid phase only.

By comparison of the compression curves of unknown mixtures of butane and *iso*butane with the curves for the pure components, the compositions of the mixtures can be calculated to within 0·5%. An apparatus is described for determining the necessary data using only 1 ml. of material. M. M. L.

615. Application of the Hydrogenation Method of Ter Meulen to Estimation of Sulphur in Gases. G. H. Visser and W. F. Engel. *IIme Congrès Mond. Pétrole*, 1937, **2** (Sect. 2), 543–546.—The disadvantages of the usual oxidation methods of sulphur estimation in gases are avoided by using a modification of Ter Meulen's technique.

The gas to be analysed is passed, together with hydrogen, through a red-hot tube filled with platinized asbestos. Hydrogen sulphide is formed, which is absorbed in N/10 soda and estimated colorimetrically with sodium plumbite. The method will estimate as little as 0·01 mg. of sulphur and in presence of 0·05 mg. variations of 0·002 mg. are detectable. The quantity of gas necessary to give this amount of S, being of the order of 200 c.c., can be handled and weighed in a glass vessel and swept into the combustion apparatus by hydrogen without contact with metal, mercury, or other possible absorbents of S. Furthermore, the determination may be carried out without error in refineries, etc., where the atmosphere contains S and where combustion methods frequently give erroneous results. W. P.

616. Dielectric Stability of Mineral-oil-treated Insulation. F. M. Clark. *Industr. Engng Chem.*, 1939, **31** (3), 327.—The effect of oxidation of an insulating oil on the electrical properties of an oil-treated cellolosic insulation cannot be properly determined by the frequently used beaker test. The author tests the impregnated circulation in the form of a capacitor consisting of eight sheets of 0·0127-mm. linen paper between 0·0762-mm. aluminium foil electrodes. The components are vacuum dried at 100° C. and impregnated with degassed mineral oil. The power-factor test is then carried out at 75° C. and 812 volts per mil, and is continued for about 10 weeks.

The results of such tests using Gulf Coast oils show that the most satisfactory oil

contains a minimum of olefinic material and between 4% and 8% of unsaturated aromatic compounds. Completely saturated paraffin mixtures are not suitable. Aromatic hydrocarbons added for the purpose of increasing stability of the insulating oil should not have paraffinic side-chains.

Oil-soluble contaminants may be split into two classes. The first type give high initial power factors, but this does not seriously increase during the life-test. The other type gives the reversed effect, being without serious effect at the start of a test, but raising the power factor seriously as the test proceeds. P. D.

617. Investigation of Insulating-oil Deterioration: Critical Study of Tests. J. C. Balsbaugh and J. L. Oncley. *Industr. Engng Chem.*, 1939, **31** (3), 318.—Special tests for stability were made on two mineral oils, and on cetane, decalin, and tetralin. The oxidation tests were made by measuring the amount of oxygen absorbed at various temperatures, and the oxidized oil was analyzed to give the quantities of acid, ester, and peroxide formed. There are other oxidation products formed besides these, the main volatile one being water. A suitable test for aldehydes and ketones is lacking. The possibility of a suitable test using Grignard reagent is discussed.

D.C. and A.C. conductivities were also measured. It was found that the conductivity was independent of frequency both before and after oxidation, and was therefore ionic in character. Tests were also made on light absorption of the fresh and oxidized materials, using a spectrophotometer at frequencies from 400 to 700 μ, and the transmission at various wave-lengths were related to conductivity and amount of oxygen absorbed. P. D.

618. Liquid Dielectrics: Chemical, Physical, Electrical Properties of Systems containing Lead or Copper Soaps in Liquid Paraffin. J. D. Piper, A. G. Fleiger, C. C. Smith and N. A. Kerstein. *Industr. Engng Chem.*, 1939, **31** (3), 307.—Power-factor measurements were made on mixtures of copper and lead soaps of a number of acids in liquid paraffin. The experiments were made over a temperature range 20–100° C. The physical properties of the various soaps are given. For the most part a concentration of 0·15% of soap was used. A visual test was applied to determine the temperatures below which the various systems ceased to be homogeneous. The power factors were measured at 60 cycles and 50 volts per mil.

The systems containing lead soaps became cloudy on cooling and had high power factors at temperatures immediately above the point of separation.

The systems containing copper soaps had low power factors at all temperatures. The results indicate that the electrical properties of the system are mainly dependent on the degree of dispersion of the soap. P. D.

619. Determination of the Adsorbing Power of Carbon for Carbon Black Tetrachloride as a Method of Determining its Activity. T. Patryn. *Przeg. Chem.*, 1938, **22** (11–12), 444–448.—The problem of active fillers for the manufacture of rubber is discussed. With regard to carbon black in particular, it is pointed out that attempts to correlate its adsorption power with its active properties have not been very successful.

A method of determining the maximum adsorption power of carbon black for vapours of low-boiling organic liquids is described. It consists in sucking a stream of air saturated with the vapour through a known quantity of carbon black, until constant weight is attained. Special precautions are taken to maintain the carbon black at constant temperature.

As a result of the investigation, a relationship was established between the adsorption power of carbon black and its activity with regard to rubber. It was shown that the adsorption power for carbon tetrachloride increases with increasing activity. Thus active carbon black adsorbs 14·3–10·5%, inactive 3·1–0·64% CCl_4. By this simple and quick method it is therefore possible to predict the behaviour of any carbon black in rubber. E. J. W.

620. Accurate Fractionation of Hydrocarbon Blends. Benzol-Verband. *Brennst-Chemie*, 15.5.39, **20** (10), 181–182.—Reply to a recent article by H. Brueckner (see Abstr. No. 506, 1939) asserting that no essential difference existed between his method and that of the Benzol–Verband.

Distillation apparatus and method of test used are described in detail, and it is claimed that differences are considerable. The Benzol–Verband method enables the separation of benzene and toluene with an intermediate run of only 0·5%. Distillation of specially prepared blends of benzene containing 0·6, 1·7, 3·2, and 5·3% of toluene gave, according to the B.–V. method : 0·65, 1·95, 3·13, and 5·06%.

In general, with 100 cu. cm. quantities sufficiently accurate toluene contents are obtained. L. R.

621. Russian Standards for Steam Turbine and Transformer Oils. P. A. Khokhryakov. *Neft. Khoz.*, January 1939, 25–26.—The newly projected turbine and transformer-oil standards contain, in general, increased requirements. After exposure to the standard "Z.E.S." oxidation test, acidity should not exceed 0·35 mg. KOH (previously 0·6) and insolubles should be below 0·15 (0·1)%. Experiments carried out in the Azerbaidshan Petroleum Research Institute ("Aznii") have shown that oils complying with these specifications can be produced, and that optimum refining results are obtained when 10% acid is used. The demulsification number should not be less than 750. The acidity limit is reduced to 0·04 mg. KOH both for turbine (0·07) and transformer oils (0·05). The maximum viscosity at 20° C. of transformer oil is reduced to 5 (6) °E. A new grade of transformer oil having a pour point of — 35° C. is to be introduced for service in parts of the Soviet Union where the most severe conditions of cold do not occur, *e.g.* North Caucasus, Daghestan, part of the Ukraine, and the Krim. L. R.

622. Rapid Determination of Water in Butyl Alcohol. G. Lazzari. *Chim. e Industria*, 1939, **21** (2), 68–69.—The author mentions the various methods used for the determination of water content in alcohols, including that based on the decrease in solubility of hydrated alcohols in organic solvents. From the quantity of water necessary to produce turbidity in an alcohol–solvent blend, the percentage of water contained in the alcohol is deduced by means of curves. An analytical procedure is then described for the determination of water content in butyl alcohol. To 20 ml. of the alcohol under test, 2 ml. of a benzol-acetone blend (ratio 2 : 1) are added, and water is then added drop by drop from a micro-burette, shaking vigorously after each addition until persistent turbidity of the mixture occurs. Care must be taken that the temperature remains constant during the titration. From tests carried out at temperatures of 16 and 22° C. using pure normal butyl alcohol, a series of values have been derived which, plotted on a graph, represent a curve which is nearly linear. P. G.

623. Analysis of Combustible Gases. G. Pastonesi. *Chim. e Industria*, 1939, **21** (1), 4–8.—The author deals with the utilization of the cracking and hydrogenation gases in the ANIC plants, where they are converted by reaction with steam in the presence of a catalyst at 800° C. to CO, CO_2, and H.

The necessity for an accurate and rapid method of determination of the amount of H recoverable from a given plant is pointed out. These cracking and hydrogenation gases generally contain H_2S, CO_2, N, and paraffinic and unsaturated hydrocarbons. The various analytical methods mentioned, liquefying and successive fractional distillation or use of selective solvents, are too involved for practical purposes, for which a knowledge of the percentage of hydrocarbons and their mean formula is sufficient. From the latter data the production capacity in H of the various gases delivered by the plants can be calculated, and the yield from the conversion of the gases can be controlled.

The author describes a method of analysis based on absorption of the various components of the gases to obtain a blend of hydrocarbons on which, by combustion, are determined H and C, and subsequently the mean formula. P. G.

See also Abstract Nos. 626, 627, 643.

Motor Fuels.

624. Patents on Motor Fuels. N.V. de Bataafsche Petroleum Mij. E.P. 499,678, 27.1.39. Appl. 28.9.37. Removal of mercaptans from hydrocarbon mixtures using aqueous caustic solution containing 25–75% of an auxiliary agent—*e.g.*, ethylene diamine.

Kodak Ltd. E.P. 501,844, 1.3.39. Appl. 1.7.37. Stabilization of motor fuel against gum-formation by the addition of N-alkylaminophenol and N : N^1-dialkyl-phenylenediamine.

Universal Oil Products Co. E.P. 502,110, 13.3.39. Appl. 14.9.37. Stabilization of cracked distillates against gum-formation in which a phenolic fraction boiling between 240° and 300° C., is isolated by distillation from crude phenolic substances separated from cracked distillates, and is re-added in a small amount to the cracked distillate.

E. H. Lang and R. C. Osterstrom. U.S.P. 2,149,351, 7.3.39. Appl. 24.6.35. Stabilization of cracked distillates to prevent gum formation. They are heated to 500–700° F. and maintained under a pressure of 500–1500 lb./sq. in. for a short time to render them susceptible to gum inhibitors but not gum-stable. They are then fractionated to remove constituents heavier than gasoline, and a small amount of inhibitor is added immediately.

D. L. Yabroff and E. R. White. U.S.P. 2,149,379 and 2,149,380, 7.3.39. Appl. 2.1.37. Separation of mercaptans from sour hydrocarbon distillates by treatment with an aqueous alkali metal hydroxide solution containing 40 gm. of sodium *iso*-butyrate/100 ml. of solution.

A. L. Tannehill. U.S.P. 2,150,084, 7.3.39. Appl. 9.4.36. Refining of benzol light oil for use as motor spirit.

R. E. Burk and E. C. Hughes. U.S.P. 2,150,149, 14.3.39. Appl. 5.3.36. Refining of petroleum distillates to remove sulphur compounds, by treatment in a closed circuit with an aqueous solution of caustic soda and sodium polysulphides.

W. O. Keeling. U.S.P. 2,150,170, 14.3.39. Appl. 10.3.32. Refining of cracked gasolines at high temperatures by means of adsorbent substances and passing the vapours while still hot in contact with sodium plumbite. The hydrocarbons are then fractionated in two stages, one under atmospheric and the other under sub-atmospheric pressure.

W. A. Schultz. U.S.P. 2,151,721, 28.3.39. Appl. 16.5.35. Desulphurizing of hydrocarbons containing non-heterocyclic and heterocyclic organic compounds, by treating the vapours at 600–800° F. with bauxite.

D. L. Yabroff. U.S.P. 2,152,166, 28.3.39. Appl. 28.9.36. Separation of mercaptans from hydrocarbon distillates by treatment with an aqueous solution of alkali metal hydroxide containing 25–75% of a butylene glycol and 15–50% of water, and separating the treated distillate from the aqueous alkali metal hydroxide solution containing mercaptans.

D. L. Yabroff. U.S.P. 2,152,720, 4.4.39. Appl. 28.9.36. Separation of mercaptans from motor spirit by treatment with an aqueous solution of an alkali metal hydroxide containing 15–85% of a compound from the group of amino-alkylamines and alkanolamines the alkylene groups of which contain less than 4 C atoms.

D. L. Yabroff. U.S.P. 2,152,721, 4.4.39. Appl. 26.5.37. Removal of mercaptans from light distillates by extraction with an alcoholic aqueous solution of an alkali metal hydroxide (50–60% of methyl or ethyl alcohol and at least 25% of water and alkali metal hydroxide). The spent solution is regenerated by air-blowing to oxidize the mercaptides to disulphides, which are then removed.

D. L. Yabroff and E. R. White. U.S.P. 2,152,722, 4.4.39. Appl. 22.10.37. Separation of mercaptans contained in hydrocarbon liquids by treatment with an aqueous solution of a metal hydroxide containing a substantial amount of dissolved alkali metal salt of an aliphatic hydroxy carboxylic acid having from 3 to 7 C atoms.

D. L. Yabroff. U.S.P. 2,152,723, 4.4.39. Appl. 1.11.37. Separation of mercaptans from hydrocarbon distillates by extraction with an aqueous solution of caustic alkali (using at least 5% by volume of 2–10 normal aqueous alkali metal hydroxide solution in which is dissolved 15–85% of an aliphatic diamino alcohol having 3 to 5 C atoms).

H. B. Cooke. U.S.P. 2,154,064, 11.4.39. Appl. 31.10.35. Production of motor fuel by cracking hydrocarbon oil to produce gasoline and normally gaseous hydrocarbons. The latter are subjected to polymerization to produce motor fuel.

C. E. Dolbear. U.S.P. 2,154,424, 18.4.39. Appl. 1.3.35. Removal of sulphur compounds and gum from acid-treated petroleum distillates by bringing the distillates in the liquid phase into contact with air and a substance containing quicklime. The treated distillate is then removed and treated with a solid oxidation catalyst comprising sodium ferrite in the presence of air.

M. Mizuta and T. Yoshimura. U.S.P. 2,154,988, 18.4.39. Appl. 11.8.34. Refining of cracked oil by means of metallic soaps of oleic acid dissolved in a volatile organic solvent which will disperse homogeneously in the oil.

T. O. Edwards, Jr., and D. D. Stark. U.S.P. 2,155,007, 18.4.39. Appl. 17.8.36. Refining of cracked distillates by selectively polymerizing the sulphur compounds contained therein. A stream of the oil is cooled to 0–70° F. and allowed to flow upward through several treating-towers containing a contact material, and a stream of sulphuric acid sludge is passed through the tower counter-current to the oil stream and over the contact material.

A. T. Scott. U.S.P. 2,155,367, 18.4.39. Appl. 26.10.37. Refining of benzol by treatment at 130° F. with acid sludge obtained from the refining of light oil with concentrated sulphuric acid. W. S. E. C.

Lubricants and Lubrication.

625. Composition of Lubricating Oil. M. R. Cannon and M. R. Fenske. *Industr. Engng Chem.*, 1939, **31** (5), 643.—A wax distillate fraction of a Van Zandt Texas crude oil having a viscosity index of 60 and a 100° F. viscosity of 169 centistokes was separated by alternate distillation and solvent extraction processes into 0·05% fractions on the original crude. Fractions ranging in viscosity index from — 114 to 109 were obtained, and approximately half of the oil could be blended into a product with a viscosity index of 100. The materials of low viscosity index are very viscous, whereas those of high viscosity index are relatively non viscous. Further refining of the 0·05% fractions in an efficient reflux extraction unit yielded products of widely different properties. No appreciable quantities of materials with intermediate viscosity indexes were obtained, and in all cases where close-cut fractions were processed in the reflux extractor, the transition from the negative viscosity index region to the highly positive region was very sharp.

The viscosity of polynuclear compounds that are undoubtedly in the extract samples increases with boiling point at a rate that is as much as ten times the rate at which the viscosity of the more paraffinic raffinates increases with the same change in boiling point. Thus, many products of identical boiling points differ in viscosity by several hundred per cent.

The data obtained indicate the extreme complexity of lubricating oil. A material balance carried out throughout the work allowed the percentage of any one sample which was present in the original crude to be known. H. E. T.

626. Contribution to the Problem of Lubricating Value. E. H. Kadmer. *Petrol. Z.*, 1939, **35**, 171–179.—The advantages and disadvantages of the Thoma oil-testing machine are discussed and results given of tests on a number of lubricating oils.

From the results it appears that Pennsylvanian oils are more valuable than others, whilst the synthetic oils made in Germany from paraffin wax come next. All other lubricating oils have a lower lubricating value, and strong objections are made to some of the modern methods of refining, including solvent refining of non-paraffinic oils. It is claimed that the value of the refining method can be detected by the machine.
E. W. S.

627. Asphalt in Car Engine Oils. E. H. Graefe. *Petrol. Z.*, 1939, **35**, 178–179.—Alphaltic matter does not accumulate indefinitely if an engine oil is used for much longer periods than is usual. An oil has been tested for asphalt content after being used for seven years continuously in a car engine with occasional draining and filtering. Even the make-up of the supply in the crankcase was made with reclaimed oil. It was found that no asphaltic matter was present. The explanation lies in the fact that the whole of the asphalt is adsorbed by the carbon always present in the form of fine particles of soot in used oil. If, as in modern filters, it is possible to get the free carbon out of the oil, the latter shows no signs of " ageing," according to these tests, and can be used indefinitely.
E. W. S.

628. Patents on Lubricating Oil. W. B. McCluer and M. R. Fenske. U.S.P. 2,149,531, 7.3.39. Appl. 26.12.33. Extraction of lubricating oils with pyridine and precipitating the oil in steps by successively introducing into the solution desired quantities of methylcellosolve and removing the precipitate formed after each addition of methylcellosolve prior to the next addition.

A. B. Brown. U.S.P. 2,149,574, 7.3.39. Appl. 29.6.36. Counter-current extraction of hydrocarbon oils using dichlorethyl ether.

F. P. Vickery. U.S.P. 2,149,752, 7.3.39. Appl. 4.1.34. Production of oils of high saturation by treating petroleum oils or their distillates with acetone and sufficient ethylene glycol to reduce greatly the capacity of the acetone to dissolve the saturates.

W. A. Myers. U.S.P. 2,150,183, 14.3.39. Appl. 18.7.36. Solvent extraction of hydrocarbon oils using as solvent a mixture of nitrobenzene, *o*-nitrotoluene, and diethyleneglycol mono-ethyl ether.

D. S. McKittrick and H. J. Henriques. U.S.P. 2,150,334, 14.3.39. Appl. 20.6.36. Solvent refining of hydrocarbon oil using a solvent containing 10–60% of ethylene glycol monomethyl ether and 40–90% of secondary butyl alcohol.

R. A. Halloran and A. L. Lyman. U.S.P. 2,150,501, 14.3.39. Appl. 1.8.36. Dewaxing hydrocarbon oils by dissolving in the oils before chilling a minor quantity of viscous pitch prepared by treating petroleum cracking still residues with H_2SO_4, removing the sludge, and subjecting the residue to non-cracking distillation under sub-atmospheric pressure to obtain a distillate residue of flash point 400° F.

W. B. Hendrey and E. C. Knowles. U.S.P. 2,150,547, 14.3.39. Appl. 18.11.35. Dewaxing of oils using acetone benzol and an oil-soluble polyvalent metallic soap of an organic acid, and incorporating in the mixed solvent soap a small quantity of montan wax and heating to 160–170° F. The heated mixture is then chilled to precipitate wax.

E. C. Knowles. U.S.P. 2,150,552, 14.3.39. Appl. 18.11.35. Dewaxing oils with a solvent in which are incorporated small amounts of crude montan wax, heating to 160° F., and chilling to precipitate the wax.

B. G. Aldridge and E. G. Ragatz. U.S.P. 2,151,310, 21.3.39. Appl. 26.8.35. Distillation of heavy oil, containing gas oil, lubricating oil, and asphalt, into its components.

O. L. Roberts. U.S.P. 2,151,529, 21.3.39. Appl. 10.6.33. Counter-current extraction apparatus.

S. W. Ferris. U.S.P. 2,151,592, 21.3.39. Appl. 18.7.35. Solvent extraction of lubricating oils of the Pennsylvanian type using nitrobenzene.

F. Schick. U.S.P. 2,151,619, 21.3.39. Appl. 4.8.36. Preparation of substantially pure paraffin wax by treating crude wax obtained from bituminous tar with phenols of low b.pt. After removing the phenol and impurities from the wax, it is sweated and treated with an adsorbent to decolorize it. W. S. E. C.

See also Abstract Nos. 616, 617 and 621.

Gas, Diesel and Fuel Oils.

629. Diesel Fuels Blended from Coal-Tar Oil. H. Kölbel. *Oel u. Kohle*, 1938, **14**, 1042–1049.—The consumption of diesel fuel in Germany almost trebled between 1931 and 1937, but the production remained almost constant at about 10% of the requirements in 1937. Of the internally produced fuel, 45% was from German crudes, 34·6% from lignite-tar oil, 2·8% by synthesis, and 9·4% from coal-tar oil. The author is concerned with increasing the amount of oil derived from the last source.

The chief disadvantage of this last fuel is its low cetene number—20, compared with 60–70 for diesel fuel of petroleum origin. On the other hand, Kogasin II, the product obtained from the Fischer–Tropsch synthesis, has a cetene number of 110–120. Accordingly, a fuel with a cetene number of the desired order can be obtained by blending coal-tar oil with Kogasin II. Unfortunately, the purely aliphatic nature of the latter causes the precipitation of asphaltic matter from the former, with resulting difficulties in storage and excessive coking on the injector nozzles of the engine.

This difficulty is overcome by subjecting the coal-tar oil to a special processing, involving the use of Kogasin II as a selective solvent. This process is economically favourable, as the by-products can be reclaimed and used for other purposes.

Tables are given showing the excellent results obtained by this treatment, both with respect to storability and to the very slight tendency to formation of asphalt and coke. Analysis data of a diesel fuel prepared in this way are compared favourably with those of an imported diesel oil.

Motor tests show the blended fuel to be superior to imported gas oil as regards exhaust temperature and CO content of the exhaust gas; in each case the divergence increases with increasing load. Further, 18 months practical trial has shown that, compared with a petroleum diesel fuel, a blend of processed coal-tar oil and Kogasin II exhibits: high ignition quality—*i.e.* easy starting—small tendency to coking; complete combustion over a wide range of load—*i.e.* good response on acceleration—clear exhaust gas with very low CO content, and correspondingly low fuel consumption at full and over-load. T. T. D.

See also Abstract No. 611.

Asphalt and Bitumen.

630. Rigidity Modulus of Bituminous and Bitumen—Filler Mixtures. T. Lonsdale and J. S. Wilson. *Road Research Technical Paper* No. 6.—It is stated that previous work on bituminous materials has dealt only with their plastic behaviour under steady loads, whereas during the passage of a vehicle over a road the surface is stressed only momentarily, and under these conditions the deformations produced in the material are mainly elastic. The authors have therefore developed a method of measuring the rigidity moduli of bituminous binders, and a description of this is given.

A study was made of the oscillation of inertia discs suspended by a steel wire of known diameter, when constrained at its lower end by a rod of the bitumen, carefully prepared so as to be of even diameter throughout to within 1%. The system was set in oscillation under strict temperature control, and the amplitude and frequency of the oscillations were observed by the movements of a spot of light reflected from a mirror affixed to the steel wire. From the data obtained the rigidity moduli of various bitumens have been calculated. Successive determinations showed that there was no deterioration of the rod, and the reproducibility of results was stated to be reasonably good. It was therefore concluded that the rigidity modulus is a characteristic constant for a given bitumen at a given frequency of oscillation. Using 65 and 20 penetration bitumens, 20 penetration and hard pitch, and Trinidad Lake

asphalt, it was found that the rigidity muduli increased rapidly with decreasing temperature. The highest rigidity modulus observed with the hard pitch was 0·14 × 10^{11} dynes/sq. cm., compared with a value of 8 × 10^{11} for steel.

Experiments made with Portland cement filler showed that the rigidity modulus at any temperature was rapidly increased by an increase in the concentration of the filler, the proportionate increase being a function of the amount of filler added and independent of the temperature. It was further found that the rigidity modulus of a bitumen-filler mixture decreased more rapidly with increase of temperature than the rigidity modulus of the bitumen alone, whilst increase in the frequency of oscillation led to only a relatively slight increase in rigidity modulus. H. G. W.

631. Resin Acids in German Natural Asphalt. J. Jackzel. *Asph. u. Teer*, 1939, **11**, 168–170.—In earlier work it was found that the resistance to displacement of bitumen from asphalt-sand by water or alkali solution increased on storage in air of the asphalt-sand, and that acidic bodies were extracted from the asphalt by alkali solution. An investigation with asphalt from Verf after 3 months storage gave similar results, and the resin acids recovered from the alkali solution after 93 days immersion of the asphalt were yellow, of wax-like consistency, and had an acidity of 1197. During titration of the alcoholic acid solution with caustic potash the solution turned olive green in colour, and gave a white precipitate which dissolved on addition of water, the solution turning golden yellow. The effect of the alkali immersion of the bitumen was examined by : (1) washing free from alkali and drying in air ; (2) prolonged boiling of the asphalt (1) in water ; (3) extracting the original asphalt with alkali ; (4) washing free from alkali and drying in air the asphalt (3). Neither of the specimens showed displacement of the bitumen, and (1), (2), and (4) were as bright as the original asphalt, whilst (3), although dull, was as dark as the original. A further examination of asphalt immersed in alkali for 4 months gave the same results, and, after further immersion in fresh alkali for 183 days, the recovered acids had an acidity of 630. No precipitate was formed during titration, but the bitumen was not displaced. Immersion of a fresh specimen for 144 days gave acids having an acidity of 964. It was thought that the high acid number was due to decomposition of resin acids on heating with caustic potash, and, in an attempt to confirm this, the acids were recovered from the various soap solutions and re-titrated, a lower acidity then being found. This process was repeated a number of times, until a constant value was obtained. After immersion of asphalt-sand in potassium iodide for 97 days, no displacement of bitumen occurred on immersion in water or alkali ; further treatment for 146 days gave the same result. The wash-water contained no organic matter, although the asphalt after immersion in alkali or potassium iodide had a film of bright powdered bitumen on the surface. The filtered water was colourless neutral, and gave a residue of calcium sulphate when evaporated. A. O.

632. Electric Strength of Bitumen and Asphalt. T. Temme and Weber. *Bitumen*, 1939, **9** (2), 31–35.—The paper describes the apparatus and procedure employed in determining the resistance to passage of electric current, of 50 cycles periodicity, through bituminous coatings of different thickness. A series of curves show results obtained with blown bitumen alone and containing mineral filler, and floated, compressed, and mastic asphalt. Little difference was found between bitumens of 60/70 and 70/80 (K. & S.) softening point, both carrying a current of 45 K.V. with a thickness of 3 mm., but when mineral filler was added, the load decreased to 32 K.V. for a 3-mm. layer. With floated asphalt the particle size and nature of filler had no influence, and all specimens carried a load of 120 K.V. with a 30-mm. layer. Acid-resisting mastic carried a load of 114 K.V. with a 26·3-mm. layer, and was similar to synthetic asphalt, whilst compressed asphalt, as a result of the higher void content, carried loads of approximately 40 K.V. for layers 30 mm. thick. A. O.

633. Patent on Asphalt. J. B. Heid. U.S.P. 2,154,746, 18.4.39. Appl. 17.10.31. Production of asphalt by blowing an asphaltic base oil with an oxidizing gas in an oxidation zone. W. S. E. C.

Special Products.

634. Chemicals Derived from Pentanes. P. Kendall. *IIme Congrès Mond. Pétrole*, 1937, **2** (Sect. 2), 497–500.—A method is described by which the chlorination products of *n*-pentane and *iso*-pentane may be estimated by examination of the amyl alcohols obtained by the hydrolysis of monochloropentanes; the preparation and uses of the esters, amyl-mercaptans, mono-, di-, and tri-amylamines, and a nitrosoamine are described. The decomposition of amyl chlorines and the production of dichloropentanes as by-products of the pentane chlorination are also given. J. L. E.

635. Products derived from Oxidation of Hydrocarbons in the Gaseous Phase. W. de Piotrowski and J. Winkler. *IIme Congrès Mond. Pétrole*, 1937, **2** (Sect. 2), 501–503.—Mixed hydrocarbons, boiling between 170° and 250° C., are atomized with air at 300° C. into a reaction chamber filled with catalyst, where the reaction is exothermic. The resultant gases are passed to condensers and washers and three fractions obtained boiling between (1) 50 and 150° C., (2) 100 and 200° C., (3) 150 and 250° C., together with a solid residue. These fractions consist of unsaturated hydrocarbons, aromatics, saturated and unsaturated aldehydes, ketones, lactones, phenols, and peroxides. By suitable selection of catalyst the reaction can be influenced to oxidation or to dehydrogenation.

Industrial applications for these products, as made at " Galicja " refineries, include (1) Odorization of domestic gases (Detektol). (2) Denaturing of alcohol (Denoxol). (3) Prevention of deposition of gums, resins, and naphthalene in gas pipes (Denoxol-Solve). (4) As sulphonated products, as wetting agents in detergents, textiles, and dyeing. (5) Improving quality of diesel fuels by increase in cetane number. (6) Improving lubricants by increasing oiliness without increasing tendency to oxidize. W. P.

636. The Furans as Industrial Products. Anon. *Chem. Trade J.*, 3.3.39, **104**, 214; *Industr. Engng Chem.*, Feb. 1939, **31** (2), 178.—Possible applications of furfural include: fungicide and germicide (particularly mercury derivatives); mixed with kerosine or light fuel oil—herbicide; production of valuable phenol-furfural resins (these are cheaper than phenol and formaldehyde resins, and are used to cement electric-light bulbs to the brass bases). Derivatives are used as anti-oxidants and accelerators in the rubber industry. Furfural, furfuryl alcohol, and tetrahydrofurfuryl alcohol are solvents for gums, resins, etc. Tetrahydrofurfuryl acetate is a solvent for dichlorofluoromethane in the refrigerating industry. Furfural is used as a selective solvent for separating anthracene from phenanthrene and carbazole, coloured bodies from wood rosin, for the refining of lubricating oils and vegetable oils, and the improvement of diesel fuel. Furfural derivatives are used as textile wetting agents, flotation agents, as anti-scorch in rubber manufacture, demulsifying agents, and to improve the oiliness of lubricating oils. A potentially large outlet is the addition of furfural or mixtures with phenol or aniline to bitumen aggregate mixes to improve the wetting action and adhesion of bitumen. The resinous film formed also increases the weathering properties. C. L. G.

637. Plastics. A. J. Weith. *Industr. Engng Chem.*, 1939, **31** (5), 557–562.—An account is given of the rise of the plastic industry from the earliest times. This historical article outlines the multitudinous uses of the various types of plastic materials utilized in everyday service and gives some account of the difficulties experienced by the pioneers in this branch of industrial research. H. E. T.

638. Synthetic Organic Chemicals from Petroleum. B. T. Brooks. *Industr. Engng Chem.*, 1939, **31** (5), 515–519.—A review of American research in the production of synthetic organic chemicals from petroleum. H. E. T.

639. Patent on Special Products. Standard Oil Development Co. E.P. 501,670, 3.3.39. Appl. 20.9.37. Improvements in the recovery of condensing agents—*e.g.* boron fluoride catalyst—by treating the reaction liquid with substantially anhydrous

ammonia and separating the resultant NH_3BF_3 complex from the remainder of the reaction liquid. The complex is then treated with concentrated H_2SO_4 at high temperatures to remove the major portion of boron fluoride. W. S. E. C.

See also Abstract No. 621.

Detonation and Engines.

640. Oil Engine Temperature and Deflection Measurements. Anon. Based on a lecture "Recent Measurements on Diesel Engines and their Effect on Design by Robert Sulzer," delivered before the Koninklijk Institut van Ingenieurs, Rotterdam. *Engineer*, 31.3.39, **167** (4342), 398.—The results of temperature measurements showed that, with direct injection, much higher temperatures occurred at the periphery of the piston than had formerly been the case with blast injection. In addition, the problem was further complicated by the consideration that direct injection required a suitable form of combustion space.

Temperature measurements from thermocouples in the combustion space of an engine are given graphically, and show the effect of various engine working conditions. From such temperature measurements it is possible to estimate some of the stresses introduced by temperature variations.

The measurement of dynamic mechanical strain effects was obtained by means of a high-frequency coil arrangement. The results of such measurements led to the conclusion that the stresses caused by temperature were roughly three times as great as those caused by gas pressure.

Some measurements of the gas pressure behind the piston rings are given, which show that, in the case of rings giving a good pressure seal, the pressure behind the top ring follows the cylinder-gas pressure almost exactly, whilst the pressure behind each of the lower rings never reaches a very high value. The effects of temperature distortion will, however, tend to upset the sealing of the rings and allow gases to blow past.

The influence of dynamic stressing on the loading of the running gear was also measured. Under the effect of ignition knock the running gear is distorted and vibrates. The stresses are consequently increased, and become greater in proportion to the increases in pressure gradient in the first phase of combustion. J. G. W.

641. Energy Balance Sheet of the Internal-Combustion Engine. F. W. Lanchester. *Engineering*, 31.3.39, **147** (3820), 388 and 14.4.39, **147** (3822), 448.—The author uses the data given by Dr. J. S. Clarke as a basis for demonstrating his method of analysis.

Calculations and estimates based on the indicator diagram are used to obtain the work done in the various parts of the cycle, from which the heat balance is built up. The method is described in detail, the calculations for each step in the analysis being given in full, and justifications being given for any assumptions made. J. G. W.

642. Power Loss Accompanying Detonation. N. MacCoul. *J. Soc. aut. Engrs*, 1939, **44**, 154–160.—Tests on several cars to determine the power loss due to varying degrees of detonation, and the variation in octane requirement and power output consequent upon change in spark advance, lead the author to question the necessity of ensuring freedom from knock at all times.

It is shown that although only 2% loss resulted from a "medium" knock, it was necessary in various cars to increase the octane number of the fuel by from 14 to 22 points to eliminate such knock.

Tests on a single-cylinder C.F.R. engine using fuel of 44 octane number showed that whereas the torque fell off at about one ratio higher compression than that at which detonation commenced when the spark advance used was that for maximum power on a non-detonating fuel, no such fall in torque occurred if the spark was adjusted for maximum power at each setting of compression on the detonating fuel, the progressive increase in torque being limited only by the onset of pre-ignition. Retarding the spark to the threshold of knock, however, at each ratio caused a rapid fall in power to occur.

Data are given showing the effect on engine temperatures as affected by varying spark advance and compression. Spark plug, piston, and inlet valve temperatures

rose with compression ratio increase, whereas exhaust gas, exhaust valve, and heat losses to jacket were lowered, even during detonation, when spark was set for maximum power. It is concluded that it is desirable to use a compression at least one ratio higher than critical for the fuel to be used, and retard the spark sufficiently to eliminate knock. This procedure results in higher efficiency, but, what is still more important, if it becomes desirable to use a higher-octane fuel, it makes possible a noticeable gain in power by suitably advancing the spark. C. H. S.

643. Measurement of Cetene Number. M. Moynot. *Bull. Ass. franç. Tech. Petrol.*, March 1939, (48), 31–63.—The conception of ignition quality in diesel fuels is not new, but its importance has been greatly accentuated by the recent development of high-speed engines. The author briefly surveys the work of various investigators since 1931 regarding the study of ignition lag and the evaluation of fuels in terms of standard reference fuels. He then describes various means which are, or have been, used to determine cetene or cetane numbers, including the variable-compression C.F.R. engine with bouncing-pin, Penn State method, and the critical compression ratio method of Pope and Murdock. Numerous tests conducted under the auspices of the Institute of Petroleum have shown that good agreement between ratings on different types of engines is possible if suitable secondary standard fuels are used; ignition delay may be determined with a suitable indicator capable of reading to $\frac{1}{4}$ degree of crankshaft angle. Another method is to throttle the air intake until the engine just commences to misfire and note the absolute pressure in the intake manifold. Cetene number is deduced from a previously determined curve relating intake pressure to cetene numbers of known secondary reference fuel blends.

In the Dumanois method a base gasoline is diluted with 25% of the fuel to be tested, and the octane number of the blend is determined. The cetene number of the test fuel is deduced from a calibration curve; the latter is established by measuring the octane numbers of blends of secondary reference fuels added to the base gasoline in the same proportion as the test fuel. The principal advantage of this method is the ability to utilize the standard C.F.R. gasoline engine.

As a standard reference fuel of high ignition quality, cetene has been replaced by cetane, but, in the author's view, cetene has a certain advantage in being easier to prepare; also, the melting point of cetane is rather high. For conversion from one scale to the other it is noted that:

$$\text{Cetane Number} = 0{\cdot}88 \times \text{Cetene Number}.$$

In practice, secondary reference fuels are usually employed; those recommended by the Institute of Petroleum have cetene numbers of 80 and 20·5, respectively.

The bouncing-pin method permits an accuracy of the order of $\pm$ 1·5 to $\pm$ 2·5 cetane numbers. The critical compression ratio method is quicker, but less accurate; it is a test of starting ability rather than of performance under normal running conditions. The author shows curves correlating different methods of measuring cetene numbers, and discusses the probable accuracy of these methods. His own experience favours the Institute of Petroleum method, using an indicator on the C.F.R. diesel engine. Nevertheless, there is much to be said for the Dumanois method, provided it is restricted to normal fuels; hence the calibration curve must be made using secondary standard reference fuels.

Ignition delay, in crankshaft degrees, does not show a straight-line relation with cetene number. Hence the accuracy of measurement diminishes with increasing cetene number, whilst, beyond a certain limit, further increase of cetene number cannot result in further shortening of the delay period. The physical nature of ignition delay is discussed, and reference made to researches in which the first appearance of flame in the combustion chamber has been studied in relation to pressure rise as shown by an indicator. However, for practical purposes fuels have to be classified according to smoothness of operation, so that methods based on the pressure diagram are to be preferred.

Finally, the author discusses the suitability of various indices based on the physical properties of fuels, such as diesel index, parachor, etc. He concludes that none of these is suitable for use in specifications, although some may be useful in controlling refinery production. Nevertheless, for specification purposes the cetene scale is too narrowly sub-divided, and a numerical scale ranging from 0 to 20 would be preferable.

K. T. A.

644. Characteristics of Magnetically Actuated Fuel Injection Valve. C. J. Vogt and T. A. Rogers. *Automotive Ind.*, 1939, **80** (16), 530–536.—The article describes some tests made on a system of injection developed by the Atlas Imperial Diesel Co. of California. This employs the " common-rail " principle with a magnetically actuated nozzle. The object of the tests was to compare the characteristics of the new system with those of a jerk-pump system. Spray formation was studied stroboscopically, whilst the electrical aspect was investigated with an oscillograph. It is concluded that the magnetically actuated spray valve offers a means of accurately controlling the quantity of fuel injected per cycle; successive sprays are reproducible, which is an important factor in smooth engine operation, and the system is independent of the dynamics of the pump and fuel column. K. T. A.

Coal and Shale.

645. Annual Report of Research and Technologic Work on Coal. Fiscal Year 1938. A. C. Fieldner. *U.S. Bur. Mines Inf. Circ.* No. 7052, Feb. 1939.—The report gives a *résumé* of recent work on : (1) the properties and composition of American coals, (2) mining problems, (3) the preparation of coal, (4) the utilization of coal, and (5) coking and the properties and utilization of coke, and the hydrogenation of coal.

Under (5) are described an experimental plant for the production of hydrogen from natural gas (containing 90% of methane) using the water-gas reaction, and the hydrogenation unit in which the coal, after mixing with an equal weight of heavy oil and 0·25% of tin sulphide and 0·25% of molybdic oxide and grinding to 200 mesh, is treated with hydrogen at 420–450° C. An assay on Bruceton coal yielded, after a single pass in the convertor, 73% of middle oil (of which 20% boiled in the gasoline range and 80% boiled below 330° C.) and 12–15% of hydrocarbon gases (C_1 to C_4). The middle oil contains 15–18% of tar acids and 3–5% of tar bases, the remaining neutral oil consisting of 6–8% olefins, 67–70% aromatics and 22–27% saturated hydrocarbons. C. L. G.

646. Studies of Certain Properties of Oil Shale and Shale Oil. B. Guthrie. *Bur. Mines. Bull.*, No. 415, 1938.—A compilation has been made of published and unpublished articles written by members of the Bureau of Mines on :—

(1) Testing methods for oil shale and shale oil.
(2) Effects of temperature and time of reaction in distilling oil shales on yields and properties of crude oils.
(3) Assay-retort studies of ten typical shales (from principal deposits in U.S., Scotland, Australia, and Brazil).
(4) Fractional " eduction " of oil from oil shale.
(5) Explosibility of oil-shale dust.
(6) Comparisons of oils derived from coal and oil shale.
(7) Weathering of Green River (Colorado and Utah) shales.
(8) Isolation and analysis of oil-shale nitrogen.
(9) Nitrogen and its compounds in oil shale and shale oil. C. L. G.

647. Luxembourg Oil Shale. G. Faber. *Petrol. Z.*, 1939, **35**, 65–66.—Part of a large oil-shale deposit extending from France to Belgium is to be found in Luxembourg, where it covers an area of 90 sq. km. The shale lies mostly on the surface, only small parts having a thin covering. The average thickness is 10 m. The bitumen content has been tested in a relatively small area, and the oil yield is given as 2·5–9%, varying greatly with depth. Although it is not possible to reach definite conclusions, it is thought that exploitation would pay if, as in France, oil-shale spirit were subsidized to the extent of 1·50 francs per litre. E. W. S.

Economics and Statistics.

648. Development of Petroleum Deposits in the Near East. Anon. *Oel u. Kohle*, 1939, **15**, 153–156.—The present position of the petroleum industry in the Near East is summarized. Reference is made to output, development of new fields, the results

of geological and geophysical surveys, and the areas of the concessions of the various operating companies. Iran is dealt with very briefly, more attention being paid to Iraq and the Arabian East Coast; mention is also made of North-east Persia and Afganistan, and Egypt and Turkey. T. T. D.

649. Reports of Central Petroleum Research Bureau (Argentine). G. Hileman and E. P. Canepa. *Bol. Inform. Petroleras*, January 1939, **16** (173), 17–67.—It is shown that one of the chief difficulties which stands in the way of exhaustive and economical exploitation of the various oilfields in the Argentine is the fact that they are leased to different companies, who are apt to study their own interests without collaborating with the other lessees in order to maintain a maximum yield from the field in question. H. I. L.

650. Production of Petroleum in the Argentine Republic for the Year 1938. Anon. *Bol. Inform. Petroleras*, January 1939, **16** (173), 1–15.—Production rose from 2,600,107 m.^{3} in 1937 to 2,714,824 m.^{3} in 1938. It is noteworthy that whereas in 1937 production by private concerns slightly exceeded that of the Government-controlled wells (Y.P.F.), in the year under review the latter rose very considerably (13·37%), whilst there was actually a slight decrease in the former (4·03%). H. I. L.

651. Official Report Submitted to the Chamber of Deputies by the Executive Power. Anon. *Bol. Inform. Petroleras*, Sept. 1938, **15** (169), 1–49.—Report on the Rules and Regulations governing the petroleum industry of the Argentine Republic submitted at the request of the Chamber of Deputies.

It is admitted that the policy hitherto pursued requires modification in order to encourage the growth of the nation's financial, industrial, and commercial capacity as regards development of the petroleum industry. The question is being carefully studied by the Executive Power.

It is claimed that the Republic possesses potential deposits of petroleum sufficient to meet its requirements, and that it ought not to be obliged to have recourse to international markets. It is a question of encouraging development, by suitably protecting the markets against imports. At present the Argentine markets have no means of defending themselves—*e.g.*, against the importation of crude oil to be refined in the country thus tending to raise prices.

Statistics are given of the consumption of petroleum for the last 10 years, with charts showing home production and imports; particulars and figures for distilleries and refineries are also given, together with data showing production and consumption of petroleum and its sub-products, including imports. Tables are shown giving prices and price variations, and tracing the reductions secured through the Y.P.F., particularly in the case of petrol. H. I. L.

652. Report on the Petroleum Industry in the Republic of Colombia for 1937. S. G. Bernal. *Bol. Inform. Petroleras*, January 1939, **16** (173), 76–95.—Report gives full particulars of operations of the different private concerns, and deals with proposals for legislation to combat the virtual monopoly in refined products held by one of the larger private companies, the object being to increase the benefit accruing to the State by setting up a National Refinery. Moreover, the present conditions allow of nearly all the crude oil being exported without benefit to the State. H. I. L.

653. New Regulations Concerning Statistics of German Foreign Trade in Mineral Oils and Mineral Oil Products. S. Trustadt. *Petrol. Z.*, 1939, **35**, 194–196.—The basis of the import statistics for mineral-oil products has been completely altered, beginning with the current year. All oils imported for re-exportation after being refined do not appear as imports, and the same is the case for the imports for bunkering outgoing ships. One important item has been materially changed—viz., crude oil—in that topped crude will appear together with the crude proper. Up till now topped oil was shown in combination with all "residues heavier than water." Consequently no comparison is possible of the figures of this year with the past. E. W. S.

654. Bohemia and Moravia in the Oil Economics of the Reich. I. K. Turyn. *Petrol. Z.*, 1939, **35**, 213.—Although the effect of the incorporation of Bohemia, Moravia, and Slovakia into the economic body of Germany cannot be foreseen, it can be said already that the supply of mineral oils by Roumania will be favoured for these areas. This is the more likely as Hungary will shortly build up her own oil industry on the base of the oil deposits of Lispe and the newly annexed parts of the Karpatho–Ukraine. E. W. S.

655. Legislation relating to Customs and Taxes for Mineral Oils. H. Flohr. *Petrol. Z.*, 1939, **35**, 201–208.—A summary of the regulations is given, including a large number of exemptions for asphalt, crude oil, spirits for cleaning solvents, and other manufacturing processes, and for diesel oil. It is pointed out that no exemption is granted for diesel oil for ordinary passenger cars. This fact is interesting in connection with several attempts to market diesel cars in Germany. E. W. S.

BOOKS AND PUBLICATIONS RECEIVED.

The Modern Diesel. (Fifth Edition.) Iliffe & Sons, Ltd. Pp. 254. Price 3*s.* 6*d.* nett.

The first part of this small handbook gives some account of the diesel engine from the earliest pioneer work, with special reference to the so-called " high-speed diesel." The separate sections devoted to modern fuel injection systems and cylinder-head design are each of considerable length, and well illustrated.

In view of the rapid progress in the development of this class of engine, extensive revision of the section dealing with Rail Transport has been found desirable, and recent changes in detail and current general design features are dealt with. All the well-known makes of British and foreign engines employed in Road Transport, Aircraft, Rail Traction, and Marine Service are given in tabular form, and the special features in the design of the various makes are described in some detail.

The book gives information on the application of the high-speed diesel engine to various duties in a concise manner, and should serve as a useful reference to those interested in modern practice related to this class of engine.

Gasoline Surveys for 1937 and 1938. By P. V. Rosewarne and H. McD. Chantler. Dept. of Mines and Resources, Canada. No. 796. Pp. 20. J. O. Patenande I.S.O., Ottawa. Price 10 cents.

This report contains the results in detail of the analyses of 120 samples of gasoline collected from wholesale dealers and distributors in nine cities in August 1937 and August 1938. The results show that the average gasoline during 1937 and 1938 was of good quality. According to the analyses, three groups of gasoline are being sold in Canada. These groups differ principally in knock rating. In 1937 and 1938 the average knock rating of Group I Gasoline was 78 O.N., of Group II, 70 O.N., and of Group III, 60 O.N.

Lexicon of Geologic Names of the United States. Compiled by M. Grace Wilmarth. U.S. Geol. Survey Bull. No. 896. 2 parts. Pp. 2396. Superintendent of Documents, Washington, D.C. Parts 1 and 2, $2·50 per set.

Definitions of geologic names giving briefly the lithology, thickness, age, underlying and overlying formations, and type locality. References to the literature from which the material has been gleaned are also given.

Annual Reports of the Society of Chemical Industry on the Progress of Applied Chemistry. Vol. XXIII. 1938. Issued by the Society of Chemical Industry. Pp. 856. Indexes 784–856. Price 12*s.* 6*d.* (7*s.* 6*d.* to Members of the Society of Chemical Industry.)

This well-known collection of reports contains twenty-seven papers, each a condensed record of the notable researches during the past year in the particular industry under review. Of special interest to the Petroleum Industry is the chapter on " Mineral Oils," again ably contributed by Mr. W. W. Goulston, who reviews in twenty-six pages the outstanding developments in each section of the Industry, viz., pipe-lines, prospecting, refining, petroleum substitutes, gasoline, lubricants, fuel oils, asphaltic bitumen, cracking, polymerization, chemical derivatives, special products, and analysis and testing.

The chapter on " Fuel " by Mr. J. G. King and Dr. C. M. Cawley devotes several pages to the production of oil from coal and to synthetic oil fuels. It contains also an interesting note on the progress of the coal dust engine.

Among the other papers of general interest may be mentioned the chapter on " General Plant and Machinery " by S. G. M. Ure and F. J. Bailey and that on

" Gas, Destructive Distillation, Tar and Tar Products " by H. Hollings and W. A. Voss.

Petroleo e seus Productos. By C. E. Nabuco de Araujo, Jr., and others. Pp. 146. Tables, diagrams, illustrations and a short bibliography. J. R. de Oliviera & Co., Rio de Janeiro, 1939.

This book is a collection of individual reports dealing with Geophysics, Polymer Gasoline, Lubricants and Lubrication, Oil Shale and Cannel Coal, Flow of Viscous Liquids, Detonation and Anti-Detonants, and Analytical Methods.

Roads and Road Construction. Year Book and Directory, 1939–1940. Pp. 577. Carriers Publishing Co., Ltd. Price 10*s.* 6*d.*

In addition to a very comprehensive directory of manufacturers, highway officials and organizations this well-known Year Book contains a useful summary of technical developments during 1938. Bibliographical references are given to the more important articles on asphalt, emulsions, tar and testing methods published in Great Britain, U.S.A. and Europe.

British Standard Specification No. 756. Revised May, 1939. " for Apparatus for the Determination of Water by Distillation with an Immiscible Liquid." (Superseding B.S. 614–1936 and B.S. 756–1937.) Pp. 34. British Standards Institution, 28 Victoria Street, London, S.W. 1. Price 2*s.*

The present Specification whilst retaining, with only minor modifications, the less expensive receivers of B.S. 614, includes also receivers with identical graduated portions but fitted with ground glass joints. The size of joint adopted for the top of the receivers is the same as in B.S. 756, so that any of the receivers can be used in conjunction with the condensers specified in B.S. 756, which are also included in the present Specification. The side arm of each receiver terminates in a cone of a ground-glass joint, size No. B.24 of B.S. 572. The receivers can therefore only be used with boiling flasks having a socket of a ground-glass joint, size No. B.24 of B.S. 572.

Two types of apparatus are provided for in the Specification. Type 1 is based on the Dean and Stark apparatus and Type 2 is an apparatus which the Fuel Research Station has found to be well suited for the determination of water in coal and coke.

BIBLIOTEKA POLITECHNIKI ŚLĄSKIEJ

INSTITUTE NOTES.

JUNE 1939.

TRANSFERS TO NEW CLASSES OF MEMBERSHIP.

The Council has approved the following transfers under the new constitution of the Institute, and in accordance with the Regulations approved by the members at the Special General Meeting of 10th January, 1939. These Lists are additional to the List contained in the April *Journal*.

Transfers from Member to Fellow.

Alexander, D. L.
Baker, T. C. R.
Banks, H. A.
Beall, A. L.
Beazley, A. T.
Betancourt, N.
Beukers, J. A.
Black, A. W.
Borwick, H. B.
Bowles, J. T. B.
Brayfield, T. H. G.
Butterfield, W. J. A.
Campbell, M. D. G.
Challenger, F.
Cherry, F. E.
Chetwin, H. W.
Code, A. R.
Cogan, M. H. R.
Cox, R. C. H.
Coxon, G. H.
Dabell, A. F.
Dalley, C.
D'Arcy-Evans, G. W.
Dickinson, G.
Dodds, E.
Duckham, A.
Dunstan, E. J.
Elsby, L. F.
Evans-Jones, E.
Farmery, J. W.
Frankenburg, W. E.
Gibson, H. S.
Gluckman, B.
Grey, N. W.
Griffiths, P. M.
Hamilton, A.
Hargreaves, C.
Hart, D. A.
Hartigan, T. M.
Henson, F. R. S.
Hessel, F. A.
Higham, W. H. M.
Horwood, C. B.
Howson, H. G.
Hume, W. F.
Hunter, J. G.
Huxley, W. H.
Jackson, D. H.
Joyce, P. E.
Laycock, V.
Lea, F. B.
Lomax, E. Lawson.
Mackilligan, R. S.
Matsell, A.
Mayo, H. T.
Michie, A. C.
Miller, A. E.
Mitchell, R. G.
Mold, C. E.
McKillop, L. L.
Nash, A. W.
Page, A. E.
Paterson, R. C.
Perry, H. G. B.
Pound, G. S.
Rakestraw, R. R.
Rehbein, C. A.
Rennie, J.
Rich, R. C.
Richard, A. H.
Rosas, A.
Shepard, D. A.
Short, H. N.
Singer, L.
Smith, J.
Stephenson, F. L.
Styles, E. R.
Thomson, G.
Toone, L. A.
Trim, F. A.
Tweed, R. R.
Varley, J. H.
Vincent, J. W.
Wade, W.
Wallace, W.
White, A. T.
Wilshere, L. A.
Wilson, J.
Woodfield, H.
Young, J. H. M.

Transfers from Associate Member to Fellow.

Barr, W. L.
Barrett, G. M.
Biske, V.
Brailey, B. S.
Brown, R. G.
Cotton, G.
Cuthill, J.
Dolton, R. H.
Duck, A. E.
Fallah, R. K.
Greig, D. A.
Henderson, W. R. S.
Heseldin, G.
Hitchon, T.
Jones, D. Glynn.
Jones, H. F.
Marsden, A.
Masterson, E. C.
Nixon, I. G.
Osborn, A.
Rhys-Pryce, M. A. ap.
Scott, L. D.
Southall, R. B.
Stevens, L. C.
Stewart, M. L. H.
Taitt, G. S.
Thornton, E.
Webb, T. G.
Weiss, O.
Wilson, R. L.
Wright, P. W.

Transfers from Associate to Fellow.

Medlicott, H. E.
Weiss, C. H.

Transfers from Associate Member to Member.

Adamson, R. A.
Austin, H. G.

Barrett, J.
Bedford, T.
Bell, O. A.
Blackwell, W.
Blake-Smith, C.
Bristow, F. W.
Burnett, C. E.
Butlin, D. G.

Capper, M.
Cauthery, B. D.
Chrisman, A. E.
Clark, R. W. L.
Cock, J. N.
Cole, F. A. J.
Cole, R. A. L.
Connor, W. W.
Cooke, A. E. O.

Davies, G. V.
Davson, C. W.
Duckham, J. E.
Dunster, R. W.

Edwards, S. H.
Elliman, S.

Fielder, C. J.
Firth, W. W.
Fraser, N. C.

Gent, E. L.
Gould, G. C.
Gow, D.
Gullick, N. G.

Haker, J.
Hancock, J. G.
Harland, A.
Hastings, H. W.
Hawker, J. R. S.
Hedworth, W. A.
Hewitt, A. E.
Howard, G. P. E.
Howgill, D. R.
Humphries, A.
Humberstone, H. W.
Hutchings, G. W.
Hyams, H.

Jarman, A. W.

Kelly, F. R.
Kirby, R. N.
Knights, J. W.

Lewis-Roberts, A. L.

MacNiven, H.
Manning, E. E.
Marks, R. E.
Masters, J. S. S.
McLea, J. H.
McQueen, J. F. F.
Moore, E. L.
Muntz, F. A. I.

Nicholas, A. M.
Nisbet, R.
Noel-Paton, R. F.

Pleeth, S. J. W.
Potter, J. P.
Prentice, H. J.

Robothan, T.
Rutherford, C. V.

Sargison, E. K.
Sheel, E. W.
Simeon, L. S. B.
Singh, J. B.
Smellie, J. R.
Smith, R. W.
Storey, W. G.
Sweetland, L. B.

Trasler, P. H. B.

Walker, J. E.
Walmsley, F.
Watson, J.
Weatherill, F.
Weir, A. A.
Weitz, J. W.
Wheeler, G. E.
Wigley, E. R. J.
Williamson, A. R.
Williamson, H. S.
Woodrow, E. B.
Wright, W. M.

Young, W. R.

Transfers from Associate to Member.

Ballardie, A. W.

Clayton, H. O.

Dykes, H. J.

Hancock, G. J.
Hoggan, V. G. E.

Ingram, M.

Llewellyn, G. R.

Miller, J. F.
Miller, J. T.
Murray, R. L.

O'Brien, D. W.

Provest, T. G.

Ranson, T. W.
Rogers, R. B.

Sams, C. E. R.
Shaw, R.

Themoin, H. F.

Transfers from Associate to Associate Member.

Benford, G. A.

Clifford, G.

Dakin, F.
Doumin, R.

Ferembre, R. C. de.

Goldthorpe, H. H.

Hall, A. E. N.

Mylles, C. C.

Rankin, G.
Reid, J. W.

Smith, J. S.
Stubbs, R. B. E.

Walton, A. D.

NEW MEMBERS.

The following elections were made by the Council in accordance with the By-Laws, Section IV, Para. 7, at the Council Meeting held on Wednesday, 14th June, 1939.

Elections are subject to confirmation in accordance with the By-Laws, Section IV, Paras. 9 and 10.

Fellows.

Teale, Ronald Sowerby	Beaconsfield.
Gallaher, William Hallowell	The Hague

Members.

Arter, Kenneth Troward	London.
Bennett, John Alfred	London.
Clifford, Joseph	Blackpool.
Crossley, Stanley	Stanmore.
Driscoll, Ernest Percy	London.
Frame, Alexander	Broxburn.
Hatt, Ernest Richard	Keston.
Martin, Bernard Davis	London.
Martin, Jack William	Beaconsfield.
O'Brien, Kevin	Timperley.
O'Meara, Terence Barry	London.
Patrick, John Shaw	London.
Ramsay, Eric William	S. Africa.
Trafford, Edward le Marchant	Trinidad.

Associate Members.

Armstrong, Valentine	London.
Crighton, Robert Mill McCombe	Dundee.
Collier, Alan	Chesterfield.
Cooper Reginald Bruce	London.
Ellis, Stephen Robert Mercer	Bolsover.
Goodall, Kenneth William	London.
Holbeche, Geoffrey James	London.
Lewis, Philip Cottrell	Darlington.
Lumb, Erling	Bangor.
MacArthur, Hector	Glasgow.
Metcalfe, Thomas John	Leeds.
Mortimer, George Abbott	Edinburgh.
Newton, Ernest John	Birmingham.
Proctor, Reginald Henry	London.
Shand, Walter Munroe	Chesterfield.
Watson, Karl	Chesterfield.
White, Colin McLuckie	Winchburgh.
Wild, Eric Herbert	London.
Wilson, Edward Richard	Manchester.

Transfer to Associate Members.

Braddick, Herbert James William	London.
Bowring, Frederick Beakbane	Trinidad.
Browne, Richard Vernon	Cyprus.
Chandler, Richard	Dartmouth.
Hall, John Desmond	Pinner.
Nakib, Mohammad Abdul Ghazi	Iraq.
Newey, Clifford Samuel	Birmingham.
Rigden, Peter Montgomery	Newcastle-on-Tyne.
Saib, Mohammed Ali	Iraq.
Taylor, Theo Mallinson	London.

Students.

Bune, John Norman	London.
Noohi, Khalil	London.

CANDIDATES FOR ADMISSION.

The following have applied for admission to the Institute or transfer to another grade of membership, and in accordance with the By-laws the proposals will not be considered until the lapse of at least one month subsequent to the issue of this *Journal*, during which any Fellow, Member or Associate Member may communicate by letter to the Secretary, for the confidential information of the Council, any particulars he may possess respecting the qualifications or suitability of any candidate.

The object of this information is to assist the Council in grading candidates according to the class of membership.

The names of the candidate's proposer and seconder are given in parentheses.

BAXTER, Ian Lionel, Trainee, c/o Anglo-American Oil Co., Ltd., 36, Queen Anne's Gate, London, S.W.1 (*C. Chilvers ; E. B. Evans.*)

BOWMER, John James, B.Sc., Engineer (*Birmingham Corporation*), 30, Dyott Road, Birmingham, 13. (*H. B. Milner ; L. J. Chalk.*)

BROOKING, Miles, Director (*James White (Widnes) Ltd.*), Mill Bank Cottage, Frodsham, Cheshire. (*J. S. Parker ; D. M. Glendinning.*)

CAMERON, Alexander Bryce, B.Sc., Engineer, Anglo-Iranian Oil Company, Haft Kel, Iran. (*A. W. Nash ; L. V. W. Clark.*) (*Transfer from Student.*)

EDWARDS, Revill, Director (*Edgar Vaughan & Co., Ltd.*), 146, Streetly Lane, Streetly, Staffs. (*H. S. Garlick ; S. J. M. Auld.*)

EVANS, Archibald, Clerk, c/o Anglo-American Oil Co., Ltd., Ellesmere Port, Cheshire. (*J. E. Jenkin ; E. Evans-Jones.*)

FERNER, Robert Reuben, B.Sc., Chemist (*Shell Central Laboratories*), 7, Horton Road, Hackney, London, E.8.

FIRTH, Maurice Murrowood, Director (*Drilling & Petroleum Engineering Operations, Ltd.*), 78, Stanhope Mews East, South Kensington, S.W. 7. (*M.A. ap Rhys-Pryce ; Ashley Carter.*)

GOTTESMANN, Manfred, Student (*British Institute of Engineering Technology, Ltd.*), Rotshild Boul 84, P.O. Box 1252, Tel-Aviv, Palestine. (*J. Lee.*)

HIDSON, John, Clerk, c/o Caribbean Petroleum Company, Maracaibo, Venezuela, South America.

HUTCHISON, Arthur Gilbertson, B.Sc., Ph.D., Geologist, United British Oilfields of Trinidad, Ltd., Trinidad, B.W.I. (*H. G. Kugler ; E. C. Scott.*)

LEE, Colin Alfred, Director (*Vulcan Oil Co., Ltd.*), Elm Croft, 15, Curzon Avenue, Birstall, Leicester. (*E. E. Manning ; J. R. Smellie.*)

MORLEY, Ronald Herbert Henry, M.A., B.Sc., Chemist (*Asiatic Petroleum Co., Ltd.*), 8, Cartwright Gardens, London, W.C.1. (*J. Kewley ; W. W. Goulston.*)

POPPY, Edgar, Supervisor, Storage Installation (*London & Thames Haven Oil Wharves*), Adelaide House, Wharf Road, Stanford-le-Hope, Essex. (*J. T. Forbes ; E. A. Hunting.*)

PILAT, Mrs. Eve Neyman, Ph.D., Chemical Engineer (*The University, Lwow*), Boguslawskiego 9, Lwow, Poland. (*E. Dawidson ; S. Pilat.*)

RICHARDSON, George, B.Sc., A.R.S.M., Engineer (*Shell-Mex & B.P. Ltd.*), 20, Mereworth Road, Tunbridge Wells, Kent. (*S. E. Coomber ; G. D. Hobson.*)

UEDA, Hirosi, Imperial Japanese Navy, Broadway Court, Broadway, London, S.W.1.

WELLINGS, Frank Richard, Engineer, c/o Apex (Trinidad) Oilfields, Ltd., Trinidad, B.W.I. (*G. H. Scott ; J. D. Fullerton.*) (*Transfer from Student.*)

WYGARD, Edward Jan, Student (*Leeds University*), Belmont, Wood Lane, Leeds, 6. (*S. Pilat ; E. Dawidson.*)

ARTHUR W. EASTLAKE,

Honorary Secretary.

ROUMANIAN BRANCH.

At the 12th Annual General Meeting of the Roumanian Branch held at Ploesti on 27th April, 1939, the following were elected officers and members of Committee for the ensuing year :

Chairman : D. I. Maxwell.
Hon. Secretary and Treasurer : O. A. Bell.
Committee : E. C. Masterson, W. L. Forster, I. S. Rutherford.
Hon. Auditors : C. Brasier and G. Suciu.

The 65th General Meeting of the Branch followed the Annual General Meeting. Dr. D. M. Preda read a paper on " Possible Oil and Gas Bearing Regions in Roumania," which was followed by a good discussion.

Mr. C. R. Young, B.Sc., read a paper on " Control of Refinery Operations " at a meeting of the Branch in Ploesti on 25th May, 1939.

ROYAL SOCIETY OF ARTS.

Award of Albert Medal.

The Albert Medal of the Royal Society of Arts for 1939 has been awarded, with the approval of the President of the Society, H.R.H. The Duke of Connaught, to Sir Thomas H. Holland, K.C.S.I., K.C.I.E., D.Sc., LL.D., F.R.S., " for his services to the mineral industries."

Sir Thomas Holland was President of the Institute of Petroleum from 1925 to 1927.

The Albert Medal is the highest award of the Royal Society of Arts and amongst the names of former distinguished recipients are those of Faraday, Joule, Bessemer, Curie, Rutherford, Pasteur and Lister.

Thomas Gray Memorial Trust.

The Council of the Royal Society of Arts offer a prize of £25 for an essay on the subject of " The Carriage of Dangerous Goods by Sea." Articles of commerce covered by the definition of dangerous goods include petroleum, liquefied and dissolved gases.

Particulars of the Prize are obtainable from the Secretary, The Royal Society of Arts, John Street, London, W.C.2.

PERSONAL NOTES.

Mr. R. Allan is returning from Venezuela.

Mr. J. L. Black is leaving Sarawak and returning to England.

Mr. F. A. Chuter is returning home from Iraq.

Correspondence or *Journals* forwarded to the following members have been returned, and the Secretary would be pleased to receive any information regarding their present address : G. E. Barber, E. C. Brown, K. Burton, E. B. Chapelle, V. C. S. Georgescu, J. J. L. Hamilton, J. R. Horth, A. D. Jones, J. Lander, I. Lusty, A. MacLean, G. P. Melville, C. A. Moon, S. Nicol, G. A. O'Neill, R. G. Reid, N. D. Rothon, H. G. Spearpoint, and P. F. Thurlow.

*

NOTICES.

The Institute as a body is not responsible for the statements of opinion expressed in any of its publications.

Copyright.—Publication of abstracts of Papers and articles appearing in the Journal is permitted, provided that acknowledgment is made to the Institute of Petroleum.

Papers and Articles.—The Council invites Papers and Articles both for reading at Ordinary Meetings of the Institution and for publication in the *Journal*. All Papers, whether for reading or publication, will be submitted to a referee appointed by the Publication Committee.

The Institute has published a brochure "Instructions for the Guidance of Authors" containing details of recommended practice in the preparation of Papers for publication. Copies of this brochure will be supplied on request.

Pre-Prints.—Advance proofs of Papers to be read at Ordinary Meetings are generally available about a week before the Meeting. Members wishing to be supplied with these pre-prints are requested to notify the Secretary.

Abstracts.—Members and Journal Subscribers desirous of receiving the Abstracts printed on one side of the paper only, can be supplied with these at a charge of 10*s.* per annum per copy, payable in advance.

Issue of Journal.—Members whose subscription is not in arrear receive the *Journal* free of cost. A member whose subscription is not paid by March 31st of the year for which it is due is considered to be in arrear.

Changes of Address.—Members are requested to notify any change of address to the Secretary.

Benevolent Fund.—The Benevolent Fund is intended to aid necessitous persons who are or have been members of the Institute, and their dependent relatives.

The Fund is raised by voluntary annual subscriptions, donations, and bequests, and all contributions should be sent to the Secretary of the Institute at The Adelphi, London, W.C. 2. The Fund is administered by the Council through the Benevolent Fund Committee, and all applications in connection therewith must be made on a special form which can be obtained from the Secretary of the Institute.

Appointments Register.—A register of members requiring appointments is kept at the offices of the Institute, and every effort is made to assist members of the Institute in search of employment.

Members who desire their names and qualifications to be included in this register are requested to apply to the Secretary for the Form of Application for Registration, if they have not already done so. Members residing in the London area are asked, if possible, to return this Form in person and make themselves known, together with their requirements, to the Secretary. It is also requested that members should notify the Secretary immediately they have obtained an appointment.

In submitting names of candidates to prospective employers it is understood that the Institute accepts no responsibility and gives no guarantee.

Library.—The Institute's Library may be consulted between the hours of 9.30 a.m. and 5 p.m. daily. (Saturdays, 9.30 a.m. to 12 noon.)

HADFIELD'S

TRADE ERA 131 MARK & TRADE HECLA 153 MARK

STEAM PIPE FLANGE BOLTS

HAVE A HIGH CREEP STRENGTH

For use at the highest temperature employed in modern steam practice.
Do not become brittle as a result of operating conditions.

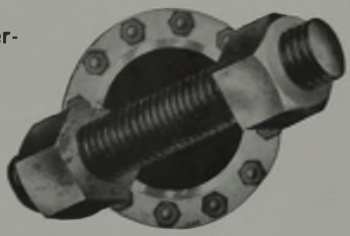

Steel Castings and Forgings of all Kinds.

Area of Works over 200 acres **HADFIELDS LTD.** Buildings cover 61 acres

East Hecla and Hecla Works, SHEFFIELD, Eng.

No. 1666.

FLAMEPROOF ELECTRICAL INSTRUMENTS

HOME OFFICE CERTIFICATE

We specialize in Electrical Instruments to comply with Home Office and other departmental Regulations; these include Portable Testing Instruments of all kinds, Switchboard Ammeters, Voltmeters and Leakage Indicators in flameproof enclosures, Speedmeters and Photometers.

Synclock Synchronous Motors for driving all kinds of Graphic Instruments and Timing Devices are supplied in flameproof and intrinsically safe types.

Full particulars will be sent on request

EVERETT EDGCUMBE

Manufacturers of all kinds of indicating and recording electrical instruments and photometry experts

COLINDALE WORKS
LONDON, N.W.9

LANE-WELLS GUN PERFORATING SERVICE IS SAFE, ACCURATE AND POSITIVE IN PENETRATION

Precautions—such as remote controlled firing—make Lane-Wells perforators safe to run and safe to handle. Tests prove their dependability, their power to penetrate. For example, the standard of penetration for a Lane-Wells gun is more than 2.397 inches of cement and steel casing. The Lane-Wells advantages are described in a recent bulletin. Write for it to-day, Lane-Wells Company, 5610 S. Soto Street, Los Angeles, California.

Right, **gun perforator chambers are double sealed against fluid.**

LANE-WELLS COMPANY

TECHNICAL OILFIELD SERVICES

GENERAL OFFICES AND PLANT
5610 S. Soto St. Los Angeles. Calif.

EXPORT OFFICES
420 Lexington Ave.. New York City, N. Y.

LIST OF ADVERTISERS.

	PAGE
Aktiebolaget Elektrisk Malmletning	—
All Steel Products Mfg. Co.	xv
Askania-Werke, A.G.	—
Babcock & Wilcox, Ltd.	—
E. B. Badger & Sons Co.	—
Baker Oil Tools, Inc.	xvi
Bluchalk Co.	—
Crag Ltd.	ix
W. Christie & Grey, Ltd.	Inside back cover
A. F. Craig & Co., Ltd.	xxi
Charles Dabell & Co	—
Duke & Ockenden, Ltd.	Inside back cover
Edeleanu Gesellschaft m.b.H.	xxiv
Everett, Edgcumbe & Co., Ltd.	vii
Foster Wheeler, Ltd.	xiii
W. J. Fraser & Co., Ltd.	—
Geophysical Prospecting Co., Ltd.	—
Hadfields, Ltd.	vii
Hayward-Tyler & Co., Ltd.	xix
I. G. Farbenindustrie A.G.	xxiii
Institute of Petroleum	x, xxii
International Paint & Compositions Co., Ltd.	—
Lane-Wells Co.	viii
Lufkin Rule Co.	—
Lummus Company	xviii
Metropolitan Vickers Electric Co., Ltd.	—
National Supply Corporation	—
Oil & Petrolem Year Book	xii
Oil Center Tool Co.	—
Oil Well Supply Co.	Back cover
Oxford University Press	xvii
Security Engineering Co., Inc.	xi
Société de Prospection Électrique	x
Sperry-Sun Well Surveying Co.	xx
John G. Stein & Co., Ltd.	xiv
Stewarts and Lloyds, Ltd.	—
Svenska Diamantbergborrnings Aktiebolaget	—
John Thompson (Wolverhampton), Ltd.	—
Tintometer, Ltd.	xvii
Western Geophysical Co.	ix

Kindly mention this Journal when communicating with Advertisers.

CEAG Limited

(The miners' lamp people)

Manufacture a wide range of lamps approved for use in Petrol Depots and other dangerous atmospheres. Groups I, II and III.

CEAG Limited, Barnsley

London Office: Windsor House, Victoria Street Tele.: Abbey 5068.

REFLECTION
SEISMOGRAPH
SURVEYS

●

The services of experienced Seismograph crews employing greatly improved reflection instruments and technique are offered to those companies desiring an effective and highly advanced Seismograph service

●

WESTERN GEOPHYSICAL COMPANY
HENRY SALVATORI. PRESIDENT

EDISON BLDG.
LOS ANGELES, CALIF

PHILCADE BLDG.
TULSA, OKLAHOMA

Kindly mention this Journal when communicating with Advertisers.

SCHLUMBERGER ELECTRICAL CORING

France.—Société de Prospection Electrique, 30, rue Fabert, PARIS.

U.S.A.—Schlumberger Well Surveying Corporation, 2720 Leeland, HOUSTON, Texas.

Local Offices: Long Beach, Oklahoma City, New York, Corpus Christi, Bradford.

Venezuela.—P. Bayle, Villa Proselec, MARACAIBO.

Trinidad, B.W.I.—Schlumberger Electrical Coring Methods, SAN FERNANDO.

Colombia.—H. Rappart, PUERTO-BERRIO.

Argentine.—G. Guichardot, COMODORO RIVADAVIA, Km. 27.

Morocco.—M. Texier, Société de Prospection Electrique, PETITJEAN.

Rumania.—A. Poirault, 18 Strada I. C. Bratianu, CAMPINA, (Prahova).

Germany.—Firma von Flotow, Schillerstrasse 36[I], HANOVER.

Dr. B. Paul, Kobenzlgasse 30, VIENNA.

Hungary.—M. Scheibli, Vadaszkürt Tür Istvan U.5, BUDAPEST.

Iraq.—L. Beaufort, QAIYARAH.

British India.—A. Couret, DIGBOI, Assam.

Burma.—L. Bordat, KHODAUNG.

Netherland East Indies.—R. Sauvage, PLADJOE, Sumatra.

Schlumberger Methods also applied in: U.S.S.R., Japan, Italy, Poland, Yugoslavia, Egypt and British North Borneo.

ANNUAL REVIEWS OF PETROLEUM TECHNOLOGY

Vol. 3 (covering 1937)

PRICE - - - 11s. post free

Members of the Institute and Annual Subscribers to the Journal may purchase one copy only at 5s. 6d. post free.

Obtainable from:

THE INSTITUTE OF PETROLEUM
THE ADELPHI, LONDON, W.C.2

A.S.T.M. VISCOSITY–TEMPERATURE CHARTS

CHART A: Saybolt Universal Viscosity (20 by 16 in.)—temperature range, — 30° F. to + 450° F.; viscosity range, 33 to 100,000,000 Saybolt Universal Seconds. Price 7s. 6d. per pad of 25.

CHART B: Saybolt Universal Abridged (8½ by 11 in.)—temperature range, — 10° F. to + 350° F.; viscosity range, 33 to 100,000 seconds. Price 9s. 6d. per pad o 50.

CHART C: Kinematic Viscosity, High Range (20 by 16 in.)—temperature range, — 30° F. to + 450° F.; viscosity range, 2 to 20,000,000 centistokes. Price 7s. 6d. per pad of 25.

CHART D; Kinematic Viscosity, Low Range (20 by 20 in.)—temperature range, — 30° F. to + 450° F.; viscosity range, 0.4 to 100 centistokes. Price 7s. 6d. per pad of 25.

Obtainable from

THE INSTITUTE OF PETROLEUM
The Adelphi, London, W.C.2

Kindly mention this Journal when communicating with Advertisers.

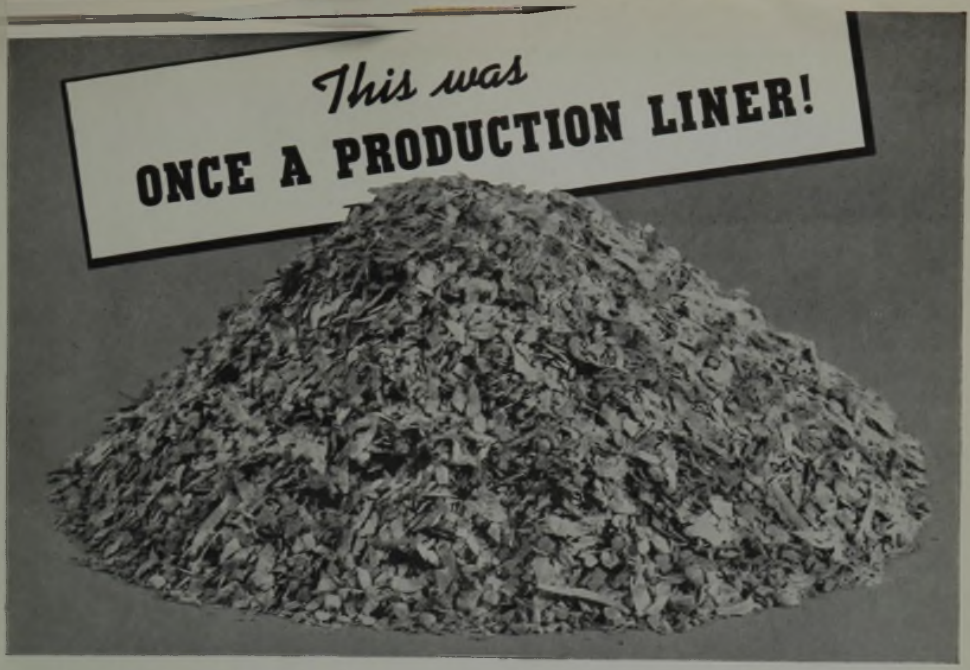

This is the way "Securaloy" drills up. Because of their low specific gravity and uniformly small size, "Securaloy" cuttings readily circulate out of the well.

And—as it does to all liners—the time came when its work was done and it stood in the way of further development operations.

But the operator didn't jeopardize his well with risky and expensive cutting, fishing and jarring operations to get this liner out.

He didn't have to...*because this liner was made of "Securaloy"!*

He merely ran a bit in the hole and drilled it up... quickly...safely...*economically*. And the cuttings—small chips with about the same specific gravity as shale—readily circulated out of the hole with the drilling fluid, leaving the well *completely clean* and open for subsequent operations.

"Securaloy" Liners and Drillable Accessories are used and accepted by operators the world over to safeguard their oil field investments and to develop their wells more efficiently, more completely. Our Engineering Department will gladly offer suggestions on the use of "Securaloy" in your particular operations. When writing, give full particulars.

SECURITY ENGINEERING CO., INC.

WHITTIER, CALIFORNIA • PHONE 42004

MID-CONTINENT: 5525 CLINTON DR., HOUSTON, TEX., PHONE CAPITOL 9538 • NEW IBERIA, LA., (Box 121) PHONE 1309

EXPORT: SECURITY ENGINEERING CO. INC., 420 LEXINGTON AVENUE, NEW YORK CITY

Sievers Reamers ★ Securaloy ★ Security Drillable Products

NOW READY

Published May 31, 1939. *Thirtieth Year.*

Contains all the latest information up to within a few days of publication.

OIL & PETROLEUM YEAR BOOK

1939

Compiled by WALTER E. SKINNER

Published Annually in May. **Price Ten Shillings Net.**

Post Free Inland 10s. 6d.; Abroad 11s.

565 pages. In Demy 8vo, bound in **RED** Cloth.

The International Standard Reference Book on the World's Oil Industry

---

Complete and up-to-date particulars of

850 ENGLISH, AMERICAN and FOREIGN COMPANIES

operating in all parts of the world.

(Producers, Refiners, Transporters, Dealers and Oil Finance Companies).

Lists are also given of the Officials connected with the Companies, and comprise 2,908 Directors, 395 Secretaries, 302 Consulting Engineers, Managers, Agents, &c., their names and addresses and Company connections.

BRANDS AND MARKET NAMES

List of 788 Trade names of Petroleum Products marketed by the various companies.

TECHNICAL GLOSSARY

Up-to-date dictionary of 136 technical terms and words peculiar to the Oil Industry.

WORLD'S CRUDE OIL PRODUCTION

Table showing the production of each country for nine years ending December 31, 1938.

BUYERS' GUIDE

A Directory containing the names and addresses of over 100 of the principal companies engaged in the Oil Industry analysed under 268 headings. These include the principal Manufacturers and Exporters of Oilfield Equipment.

The Particulars of each Company include the Directors and other officials, date established, location of property, or description of business, production, description of work in progress, capacity of refineries, capital, dividends and financial position as disclosed by latest accounts, highest and lowest prices of the shares for the last three years and latest price.

To be obtained from all Booksellers, or direct from the Publisher,

WALTER E. SKINNER

15, Dowgate Hill, London, E.C.4.

Phone: Central 1929

Complete

PETROLEUM REFINERY PLANTS

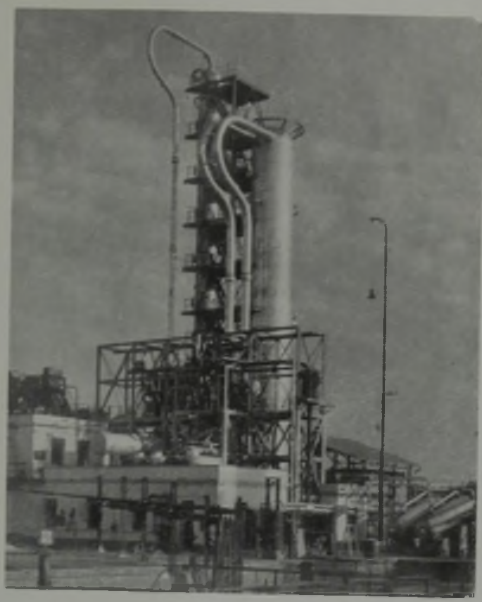

2,000 BARREL PER DAY TWO-STAGE DISTILLING UNIT AT DROHOBYCZ, POLAND

Including

TUBE STILLS, FRACTIONATING TOWERS, HEAT EXCHANGERS, CONDENSERS, COOLERS, ETC.

TELEPHONE:
HOL. 2527-8-9

FOSTER WHEELER LTD

ALDWYCH HOUSE, LONDON, W.C.2

Associated Companies:

FOSTER WHEELER CORPORATION, U.S.A.
FOSTER WHEELER LIMITED, CANADA
FOSTER WHEELER, S.A., FRANCE

Kindly mention this Journal when communicating with Advertisers.

SPECIALLY SUITABLE FOR OIL REFINERIES

stein REFRACTORIES

THE reliability of NETTLE 42/44% alumina firebricks in high temperature installations is undisputed. Users of this brand are convinced of this: those who have their refractory problem still with them may well find that a trial of NETTLE will provide a solution.

JOHN G. STEIN & CO. LTD., BONNYBRIDGE, SCOTLAND

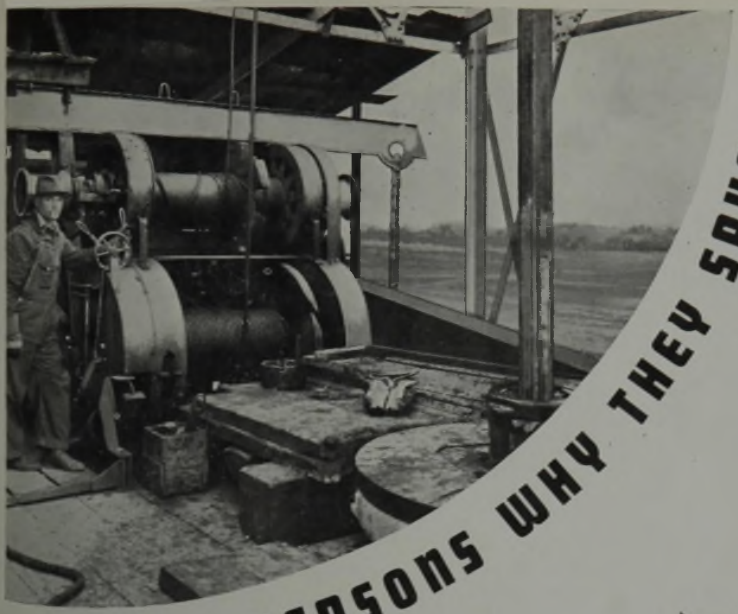

FOUR REASONS WHY THEY SAVE:

Light weight—transportation saving will pay your purchase price in five years.
Compact—designed of fewest parts with careful steel analysis. Every wearing part heat-treated for wear resistance.
Friction clutch driven—for faster drilling, cushioning the shocks and making operation much easier.
Cardwell Draw Works will "drill-up," eliminating stuck drill pipe and "twist-offs" when cave-in occurs.
Four reasons why Cardwell equipment will save YOU money.

Give us the formation data that is a problem; we may be able to assist you.
Write us to-day; we'll gladly send you photographs, specifications and prices; or see our nearest representative.

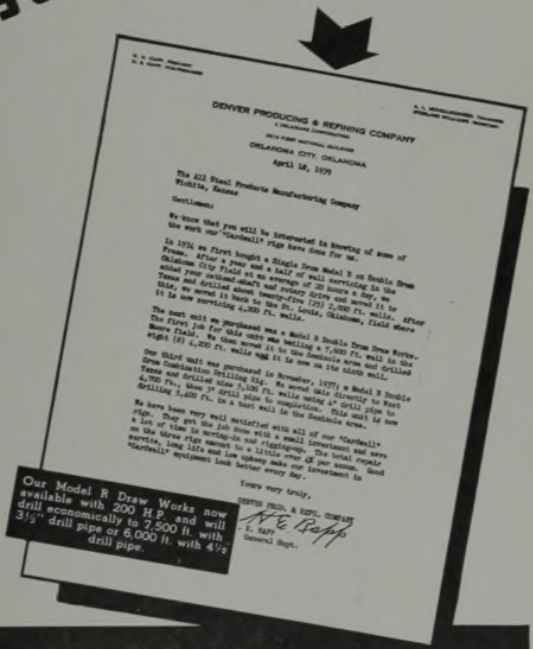

DENVER PRODUCING & REFINING COMPANY
OKLAHOMA CITY, OKLAHOMA
April 18, 1939

The All Steel Products Manufacturing Company
Wichita, Kansas

Gentlemen:

We know that you will be interested in knowing of some of the work our "Cardwell" rigs have done for us.

In 1934 we first bought a Single Drum Model E on Double Drum Frame. After a year and a half of well servicing in the Oklahoma City Field at an average of 20 hours a day, we added your original wheel and rotary drive and moved it to Texas and drilled about twenty-five (25) 2,000 ft. wells, after this, we moved it back to the Mt. Levin, Oklahoma, field where it is now servicing 4,000 ft. wells.

The next unit we purchased was a Model R Double Drum Draw Works. The first job for this unit was hauling a 7,000 ft. mill in the Moore Field. We have served it to the Seminole area and drilled eight (8) 4,200 ft. wells and it is now on its sixth well.

Our third unit was purchased in November, 1937, a Model R Double Drum Combination Drilling Rig. We served this directly to West Texas and drilled nine 5,000 ft. wells using 4" drill pipe to 4,700 ft.; then 3" drill pipe to completion. This unit is now drilling 7,400 ft. in a test well in the Seminole area.

We have been very well satisfied with all of our "Cardwell" rigs. They get the job done with a small investment and save a lot of time in moving—in and rigging-up. The total repair service, Long life and low upkeep make our investment in "Cardwell" equipment look better every day.

Yours very truly,

Our Model R Draw Works now available with 200 H.P. and will drill economically to 7,500 ft. with 3½" drill pipe or 6,000 ft. with 4½" drill pipe.

CARDWELL

THIS TRADE MARK INSURES HIGHEST QUALITY AT LOWEST PRICE

CARDWELL MFG. CO. INC.

FORMERLY ALLSTEEL PRODUCTS MFG. CO.

P. O. Drawer 1001 · Cable Addresses, "ALLSTEEL", WICHITA · "CARDSTEEL", NEW YORK

Wichita, Kansas, U. S. A.

• We Build 62 Models and Sizes of Servicing Winches and Drilling Rigs—Send your well depths and details of your well equipment for recommended model and size.

F. J. OSLEN, Export Manager, 570 Lexington Avenue, New York City

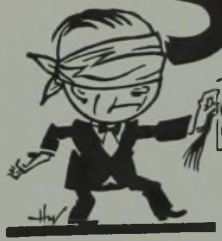

STOP GUESSING AND START CORING WITH THE

BAKER CABLE TOOL CORE BARREL

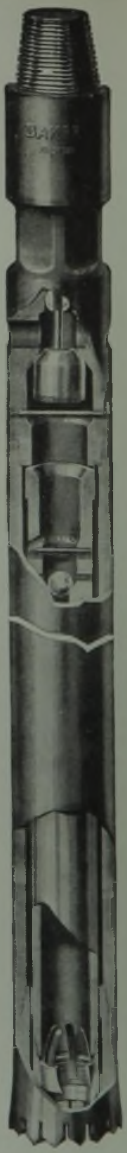

Guessing may be an entertaining parlor game, but it's a mighty expensive pastime in oil well drilling.

With thousands of dollars in equipment and labor at stake, geologists can't afford to guess regarding formation conditions — they have to *know*. The one sure way of obtaining a clear and concise picture of formation structures as they exist down in the hole is to obtain not merely ordinary core fragments or bailer samples, but rather cores that really tell the complete story; cores that are practically 100% perfect; cores that permit an intelligent analysis as a guide to further drilling procedure.

That's why the Baker Cable Tool Core Barrel is the first choice of geologists and experienced drillers by a wide margin. They know that first class cores are going to be taken on every run, in less time, and at less cost . . . with guesswork, the "bogeyman" of drilling procedure, being eliminated.

Literature and detailed illustrated catalog describing the construction and operation of this efficient core barrel will be gladly supplied upon request. *Send for it today—you incur no obligation.*

BAKER OIL TOOLS, INC.

Telephone JEfferson 8211 – HUNTINGTON PARK, CALIFORNIA – 2959 E. Slauson Ave.
Telephone WAyside 2108 – HOUSTON PLANT AND OFFICE – 6023 Navigation Blvd.

MID-CONTINENT OFFICE AND WAREHOUSE:
Telephone 2-8083 – Tulsa, Oklahoma – 312 East Fourth Street

WEST TEXAS BRANCH OFFICE
Odessa, Texas – Telephone 217

EXPORT SALES OFFICE
Rm. 1914 – 19 Rector St., New York City
Tel. Digby 4-5515

ROCKY MOUNTAIN HEADQUARTERS
Tel. 2230-Casper, Wyoming – Box 1484

BAKER CABLE TOOL CORE BARREL

THE LOVIBOND TINTOMETER

For testing the colour of all Oils

I.P.T. & A.S.T.M. Colour Standards

THE TINTOMETER LTD., THE COLOUR LABORATORY, SALISBURY

The SCIENCE of PETROLEUM

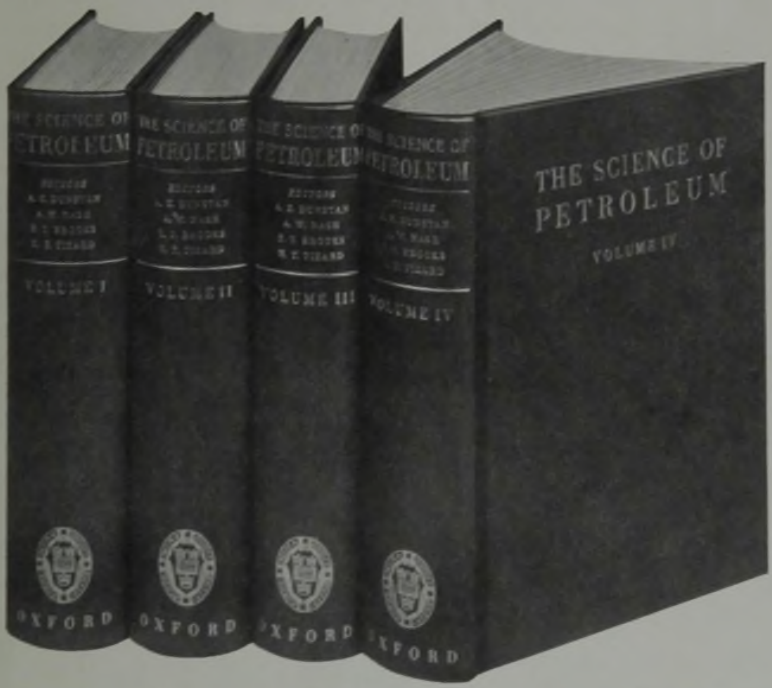

FOUR VOLUMES. QUARTO. FULLY ILLUSTRATED

Fifteen guineas net

"... As a summary of the recent state of the art this new work will remain for long unchallenged as a ready source of summarized information ..."

(The Petroleum Times, January, 1938)

OXFORD UNIVERSITY PRESS

Kindly mention this Journal when communicating with Advertisers.

5 out of 9

WERE DESIGNED AND BUILT BY LUMMUS

Of the world's Furfural extraction capacity – nine plants, with a total charging capacity of 25,110 barrels per day – five plants, with a total charging capacity of 13,050 barrels per day were designed and built by Lummus. Delivery on these five plants averaged 6½ months, and every unit operated more than thirty days on initial run.

WORLD CAPACITY— FURFURAL PROCESS

Company and Location		Charging (Bbls./Day) Capacity
Gulf Oil Corporation, Port Arthur, Texas	*	5,000
Indian Refining Company, Lawrenceville, Illinois		1,500
The Texas Company, Port Arthur, Texas		6,000
Shell Refineries, Ltd., England		1,650
Elwerath, Germany	*	1,700
Photogen Rafinerie de Petrol, Roumania	*	100
The Magnolia Petroleum Co., Beaumont, Texas	*	3,000
Trinidad Leaseholds, Pointe-a-Pierre, Tr.		2,910
Shell Oil Company, Martinez, California	*	3,250
		25,110

Low in first cost, Lummus Furfural plants yield high returns. They can be designed to handle all types of stocks, from the very paraffinic, through mixed base crude, to extremely naphthenic crudes. Write for complete data.

* Designed and built by The Lummus Company.

A. C. GRONBECK

Representing: **THE LUMMUS COMPANY**

Bush House, Aldwych, London, W. C. 2

PUMP RODS MADE OF RUBBER

That's what an engineer said looking at a lively Duplex steam pump that was struggling with a highly volatile product. This odd behaviour is more usually described as 'short-stroking,' and it occurs whenever the ordinary Duplex steam pump draws gas instead of a full charge of liquid; piston accelerations become erratic, and the steam ports are closed before the completion of the stroke.

Some users have discarded Duplex pumps on this account; others have purchased Hayward-Tyler Duplex pumps with Twells' valve gear, and are now getting the economic advantages of this type combined with positive action.

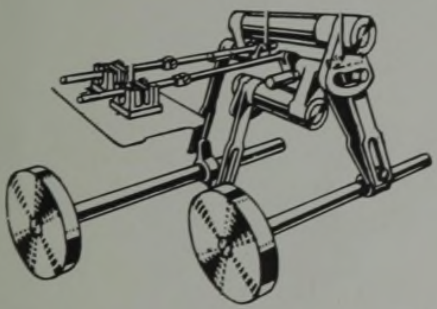

With Twells' valve gear each piston rod closes its own steam port at the end of the stroke, the opening of the port being effected by the opposite piston as with the standard Duplex. The result is ability to work with gas-laden liquids or even against a vacuum, and incidentally a saving in steam.

HAYWARD-TYLER
& CO. LTD.
PUMP MAKERS LUTON BEDS

One of the crews who operated the H-K Single Shot at Woodlawn.

FIVE MONTHS *in continuous service* Without Repairs or Replacements . . .

. . . and STILL GOING! here's the record

196 pictures in over 46,000 feet! No repairs—no replacements! It sounds like a derrick man's dream—but it's the actual performance record of an H-K Single Shot instrument used in the Union Sulphur Company's development at Woodlawn, La. And as this is written, the same instrument is still going strong!

No kid-glove handling helped to make this record possible, either. The instrument was handled by twenty different men. The company has had two rigs in the field constantly, and the instrument was transported from one to the other in a small truck, taking the rough with the smooth.

Rented on a daily basis, the Sperry-Sun H-K Clinograph is reasonable in operating cost. Plan to use it on your next drilling operation!

Name of Well	*Depth in feet*
Racca #1	8911
Calcasieu Bank #1	8905
Thomas #1	9552
Miller #2 (still drilling)	9111
Donovan O'Connor #1 (still drilling)	8159
Donovan O'Connor #2 (side-tracked hole)	2283
	46,921 feet

The SPERRY-SUN Self-Checking H-K Single Shot

SPERRY-SUN WELL SURVEYING COMPANY

1608 Walnut Street, Philadelphia, Pa., U.S.A.

OIL REFINERIES

COMBINED PRESSURE AND "VAPOUR PHASE" CRACKING UNITS

COMBINED SKIMMING AND CRACKING UNITS

ATMOSPHERIC AND VACUUM DISTILLATION TUBE STILL UNITS

Combined Distillation and High- and Low-Temperature Cracking Unit with Vacuum Flash Tower for Residue, running 8900 barrels of crude per day.

The WINKLER-KOCH ENGINEERING Co., U.S.A.

Associated Manufacturers in Europe:

A. F. CRAIG & Co. Ltd.

PAISLEY

60 years' experience in the design and manufacture of all descriptions of

OIL-REFINING EQUIPMENT

London Office: MOORGATE STATION CHAMBERS, MOORFIELDS, E.C. 2

PROCEEDINGS OF THE CONFERENCE

ON

OIL SHALE AND CANNEL COAL

Glasgow 1938

•

With Foreword by

CAPTAIN HARRY CROOKSHANK, M.P.

(Secretary of State for Mines)

•

Pp. xix + 476

Fully Illustrated. Cloth Bound.

Price 31/- post free

Price to members of the Institute

21/- post free

•

Published by

THE INSTITUTE OF PETROLEUM

THE ADELPHI, LONDON, W.C.2

Worse damage is prevented by

Tutogen »E«

the modern fire extinguisher **Tutogen E** air foam extinguishes **burning oil, gasoline or other inflammable liquids** quickly and definitely, little water is needed and little damage from water results.

Tutogen *is stored without precautions*

Tutogen *is resistant to alcohol*

Tutogen *stands temperatures down to 0° F.*

All details from the manufacturers

I.G. FARBENINDUSTRIE AKTIENGESELLSCHAFT
FRANKFURT (MAIN) 20

Kindly mention this Journal when communicating with Advertisers.

EDELEANU

OIL REFINING

SOLVENT EXTRACTING
AND
DEWAXING PROCESSES

EDELEANU

GESELLSCHAFT M. B. H.
BERLIN-SCHOENEBERG
MARTIN LUTHER-STR. 61-66

COMPANY LTD.
NEW YORK
551, FIFTH AVENUE