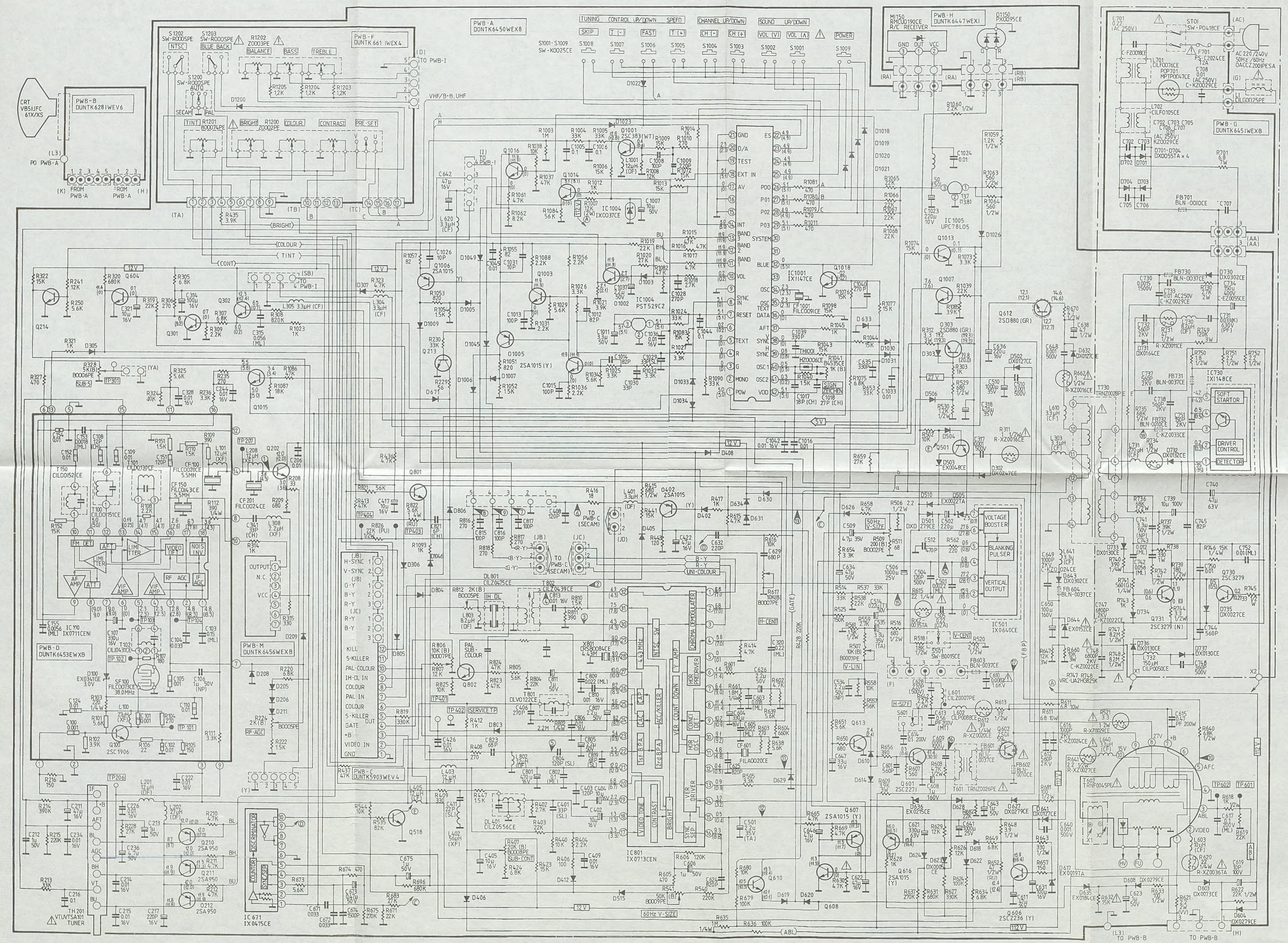
PWB-A
DUNTK6450WEX8
PWB-B
DUNTK6281WEV6
PWB-F
DUNTK661 1WEX4
PWB-H
DUNTK6447WEXI
PWB-G
DUNTK6451WEXB
PWB-D
DUNTK6453EWXB
PWB-M
DUNTK6456WEXB
PWB-C
DUNTK5903WEV4
CRT
VB51IJFC
61X/XS
TUNING CONTROL UP/DOWN
SPEED
CHANNEL UP/DOWN
SOUND UP/DOWN
SKIP
FAST
POWER
S1001-S1009
SW-K0025CE
MI150
RMC00190CE
R/C RECEIVER
D1150
PX0095CE
STOI
SW-P0418CE
AC 220/240V
50Hz/60Hz
IC1001
IX1147CE
IC1004
PST529C2
IC1005
UPC78L05
IC501
IX0640CE
IC801
IX0713CEN
IC671
IX0415CE
TH201
VTUVTSA101
TUNER
SOFT STARTOR
DRIVER CONTROL
DETECTOR
VOLTAGE BOOSTER
BLANKING PULSER
VERTICAL OUTPUT
SIGN ZEICHEN
60Hz V-SIZE
TO PWB-I
TO PWB-C (SECAM)
TO PWB-B
VHF/B-B,UHF
SHARP
SV-2142SCN

NOTES

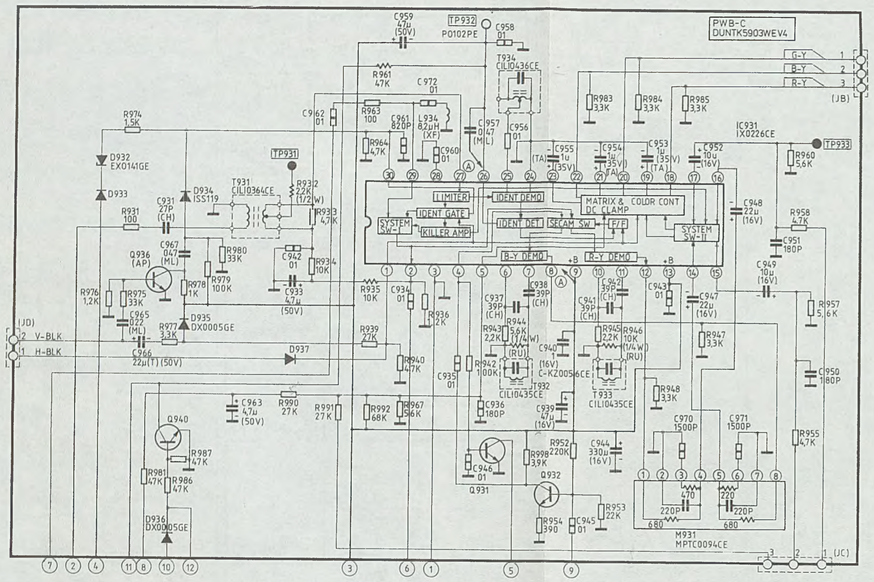

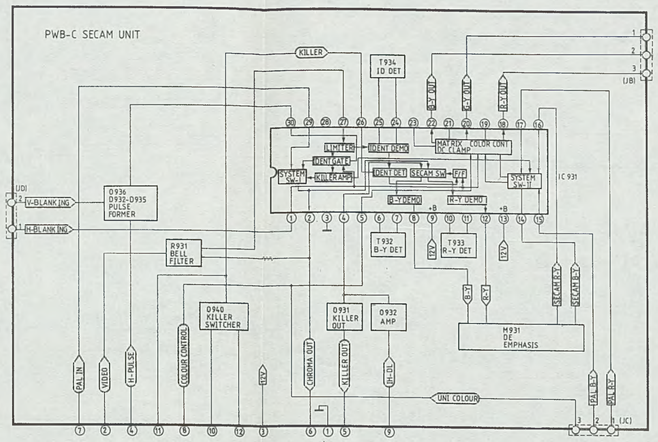

REPLACEMENT PARTS WITH TRANSISTORS

TYPE	DESCRIPTION-SHORT DATA	EQUIVALENTS
2SC 945	Si-N, Uni; 60V, 0.1A; 0.25W; 250MHz;	BC546; BC107, BC171; BC237; 2N2220-22
2SC1815	Si-N; Uni; 60V; 0.15A; 0.4W; >80MHz;	BC546; BC184; BC384; BC414; BC550
2SC1906	UHF-O, 1000MHz (Si-N)	2SC2570A, BFR37; BFT17; BFW30; BFW77; BFX59
2SC 383	Si-N, TV-ZF-E; 75V; 0.05A; 0.3W; <300MHz;	BF199, BFX94-95A; BSW63-64; BSW84-85
2SA1015Y	Si-P, Uni; 50V; 0.15A; 0.4W; >80MHz	BC556; BC177, BC213; BC204; BC307; BC512
2SA950	Si-P, Uni; 30V; 0.8A; 0.6W; 120MHz	BC640; BC328; BC298; BC728; BC636
2SC 2236	Si-N, NF-Tr/E; 30V; 1.5A; 0.9W; 120MHz	2SC3225; BC485; BC537; BC635
2SC2229	Si-N, NF-Tr/Vid; 200V; 0.05A; 0.8W; 120MHz	BF420A; BF298; BF422; BF392
2SC2271	Si-N, Vid; 300V; 0.1A; 0.9W; >50MHz	MPS-U10; BF299; BF420; BF393
2SD1554	Si-N+Di; TV-HA; 1500V; 3.5A; 40W;	S2055AF BU508D
	DIODES	
1SS119	Si, FAST SWITCH, PEAK REVERS VOLTAGE 100V I_0=200mA; I FRM_{max}=450mA trr=4ns; FORWARD VOLTAGE DROP 1.0Vat 10mA	
1SS295G	Si, GEN PURP RECT PEAK REVERS VOLTAGE 600V FAST RECOVERY I_0=1A; trr=200ns; FV_{MAX} 1.5 Vat 250mA	
EX-0048CE	ZENER DIODE 6.2V	
EX-0022TA	ZENER DIODE 11.5V	
DX-0073CE	BA159	
EX-0019TA	ZENER DIODE 12.3V	
DX-0005GE		
EX-0184GE	ZENER DIODE	
EX-0215CE	ZENER DIODE	
DX-0302CE	VARACTORS, C(4V)=12pF; C(RATIO C2/C30)=2.9p V_R=30V; I_F=200mA; P_D=280mW	

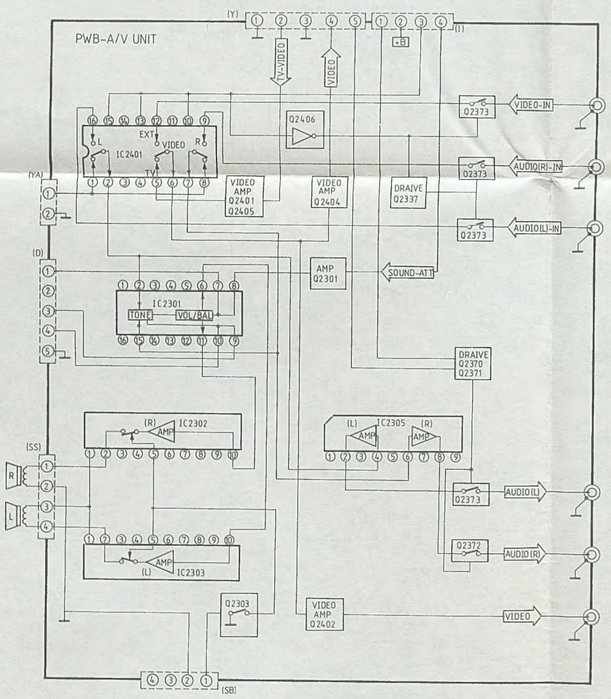

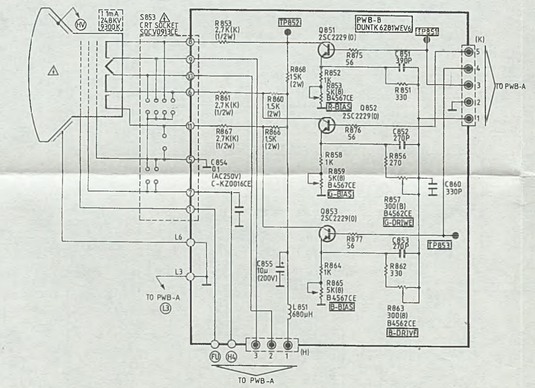

DESCRIPTION OF SCHEMATIC DIAGRAM

SAFETY NOTE:
1. DISCONNECT THE AC PLUG FROM THE AC OUTLET BEFORE REPLACEING PARTS.
2. SEMICONDUCTOR HEAT SINKS SHOULD BE REGARDED AS POTENTIAL SHOCK HAZARDS WHEN THE CHASSIS IS OPERATING.

IMPORTANT SAFETY NOTICE:
PARTS MARKED WITH ⚠ ARE IMPORTANT FOR MAINTAINING THE SAFETY OF THE SET. BE SURE TO REPLACE THESE PARTS WITH SPECIFIED ONES FOR MAINTAINING THE SAFETY AND PERFORMANCE OF THE SET.

NOTE:
1. All resistors are 1/8W, unless otherwise noted.
2. All capacitors are 50volts, unless otherwise noted.
3. All diodes are 1SS119, uneless otherwise noted.

TYPE	DESCRIPTION-SHORT DATA
EX-0152CE	ZENER DIODE
DX-0164CE	SWITCH FAST RECOVERY, DAMPER Si, PEAK REV PRV=2000V I_0=1A; trr=500ns; FKD=2W/2A
DX-0132CE	Sw, FAST RECOVERY, SCR DEFL CLAMP Si; PRV=800V; I_0=3A; I_{FRM}=9A $_{(max)}$; trr=1.3μs; FVD=1.3V/4A
DX-0130CE	GEN PURP RECT; FAST RECOVERY Si; P_{RV}=600V; I_0=1A; trr=200ns; FD_{VMAX}=1.5V/250mA
DX-0027CE	TVR 1D
EX-0341GE	ZENER DIODE 3.0V
DX-0055TA	GEN PURP RECT. Si P_{RV}=600V; I_0=1A; FVD_{MAX}=0.8V/1A

ABBREVIATIONES: Si -silicon, N-NPN, P-PNP,
Uni -general purpose; UHF-RF>250MHz; O-oscilator
ZF -intermediate frequency; E-output; Tr-driver;
Vid -video output stage; Di-diode; HA-TV horizontal deflection

SOLID STATE DEVICE BASE DIAGRAM

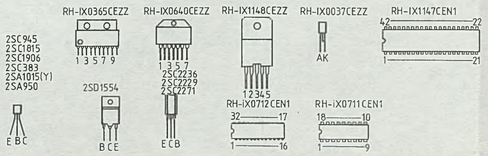

WAVEFORMS

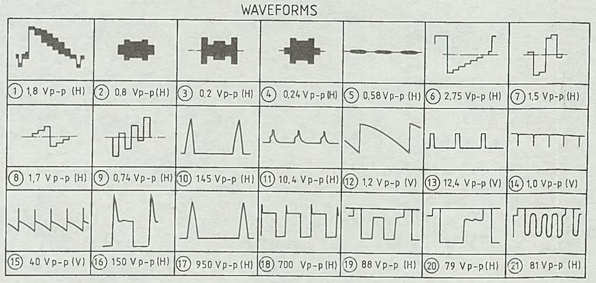

SERVICE PRECAUTION:

The area enclosed by this line (—·—) is directly connected with AC Mains Voltage.
When servicing the area, connect an isolating transformer between TV receiver and AC line to eliminate hazard of electric shock.

NOTES

VOLTAGE MEASUREMENT CONDITIONS
1. Voltages in parenthesis measured with no signal.
2. Voltage without parenthesis measured with 3000μV B& W or Colour Signal.
3. All the voltages in each point are measured with Vacuum Tube Volt Meter.

WAVEFORM MEASUREMENT CONDITIONS
1. Colour bar generator signal of 1,5 V peak to peak applied at Base of Q202.
2. Approximately 4V AGC bias.