ZESZYTY NAUKOWE POLITECHNIKI ŚLĄSKIEJ 1996

Seria: ELEKTRYKA z. 155 Nr kol. 1328

Ryszad SIKORA
Technical University of Szczecin

DIGITAL SIGNAL PROCESSING IN TEACHING ON ELECTRICAL MACHINES AND DRIVES

Summary. Digital signal processing is widely used for supply, control and protection of electric machines. Hence, the need of introducing this subject into programme of education for students of electrical faculties has arisen. The outline of such subject programme for student specializing in electric machines and drives has been presented in the paper. Schematic diagrams of supply systems with digital control (Fig. 1), reactive power compensation (Fig. 2) and parameters identification (Fig. 3) for electric machines have been shown. Introductory programme, focusing on specification of entries which must be taken into account in such programme, will be given in detail in the separate paper.

CYFROWE PRZETWARZANIE SYGNAŁÓW W PROGRAMIE NAUCZANIA MASZYN I NAPĘDÓW ELEKTRYCZNYCH

Streszczenie. Cyfrowe przetwarzanie sygnałów znajduje szerokie zastosowanie w zasilaniu, sterowaniu i zabezpieczaniu maszyn elektrycznych. Stąd też istotna potrzeba uwzględnienia powyższej tematyki w wykładach dla studentów wydziałów elektrycznych. W pracy przedstawiono zarys ramowego programu takiego przedmiotu przeznaczonego dla studentów specjalizujących się w maszynach i napędach elektrycznych. Przedstawiono schematy ideowe sterowanych cyfrowo układów zasilania (rys. 1), kompensacji mocy biernej (rys. 2) oraz identyfikacji parametrów (rys. 3) maszyn elektrycznych. Wstępny program, skupiający się na zestawieniu haseł, które muszą być uwzględnione w takim programie, zostanie szczegółowo rozwinięty w oddzielnej publikacji.

Pulsed and digital signals are nowadays widely applied for the control, feed, identification and protection of electrical machines and drives. For this reason digital signal processing should be introduced into teaching program for electrical machines and drives - oriented students. The fundamental information referring to digital signal processing (e.g. Z-transfor-

mation, FFT, digital filters and etc.) are presented in basic subjects (e.g. circuit theory) [2, 3, 4]. In teaching of electrical machines and drives only application of digital signals should be included. Digital (or pulses) signals are applied to:

1. Electrical machines feed.
2. Control of reactive power compensators.
3. Electrical machines parameters identification and for monitoring and protection.

Let us describe the problems mentioned above. In many applications the electrical machines are fed by digitally controlled pulsed currents (Fig. 1).

This kind of feed is widely applied for induction, stepper and reluctance motors. Digital processors are applied for control of passive and active (nonlinear) reactive power compensators.

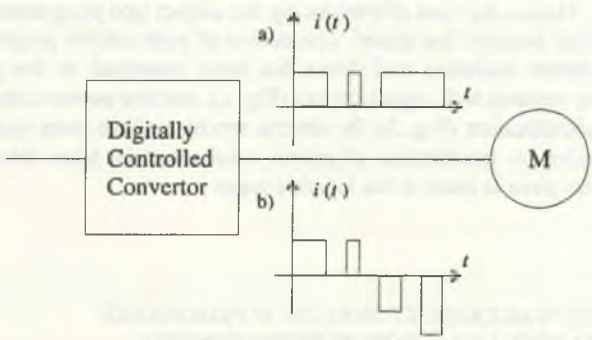

Fig. 1. Motor fed by digitally controled current convertor
Rys. 1. Silnik zasilany z cyfrowo sterowanego przekształtnika prądu

In Fig. 2 general scheme of the active compensation of reactive power is presented [5].

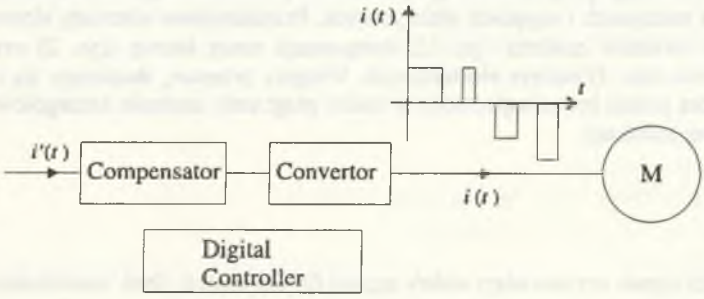

Fig. 2. Reactive power compensation
Rys. 2. Kompensacja mocy biernej

According to definition given by S. Fryze [1] a receiver supplied by any alternating current consumes only active power if the following formula is fulfiled:

$$u(t) = Ci(t) \tag{1}$$

where:

$u(t)$ - voltage,

$i(t)$ - current consumed by the receiver,

C - constant.

Taking into account fig. 2 we can write:

$$i(t) = i(t)_a + i(t)_r \tag{2}$$

where:

$i(t)_a$ - active current,

$i(t)_r$ - reactive current consumed by the receiver,

$i'(t)$ - current consumed by compensated receiver, for 100% compensation $i'(t) = i(t)_a$,

$i'(t)_r$ - compensated reactive current, for 100% compensation $i'(t)_r = 0$.

Compensators are digitally controlled .

Digital systems are applied for electrical machines parameters identification. Measured signals after digital processing are used for monitoring and protection. In Fig. 3 general scheme of identification, monitoring, signalling and protection is presented.

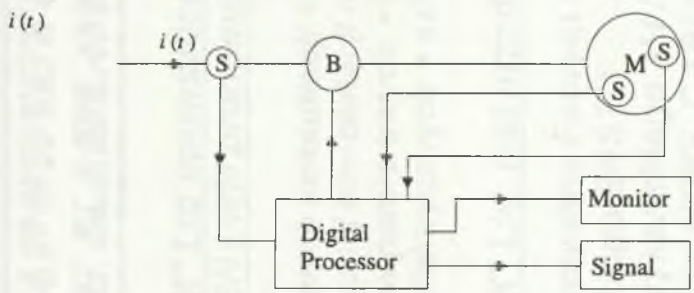

Fig. 3. Electrical machines parameters identification. S - sensor, B - breaker
Rys. 3. Identyfikacja parametrów maszyn elektrycznych. S - sensor, B - hamulec

Collected by sensors spectrum of the: magnetic field, mechanical vibrations, deformations of current after digital processing are the source of informating and alarm signals. These signals can be used for.monitoring or for emergency switch of a motor.

For digital signal processing special kind of digital filters are used e.g. predictive filters [4]. For monitoring purpose TV 2-D FIR and IIR [5] can be used. The problems presented above will be described in details in the full version of the paper.

REFERENCES

1. Fryze S.: Active, reactive and apparent power in electric circuits supplied by nonsinusoidal voltage (in Polish). Przegląd Elektrotechniczny, No 7 and 8, 1931.
2. Lim J. S., Oppenheim A. V.: Advanced Topics in Signal Processing, Prentice Hall, New Jersey 1988.
3. Papoulis A.: Circuits and Systems, A Modern Approach, Holt, Rinehart and Winston, New York 1980.
4. Steiglitz K.: An introduction to discrete systems, John Wiley & Sons. Inc., New York 1974.
5. Supronowicz H.: Reduction of higher harmonics in currents nonlinear loads supplied by power network, Technical University of Warsaw, (in Polish), No 98, Warsaw 1995.

Recenzent: Dr hab. inż. Krzysztof Kluszczyński, prof. Politechniki Śląskiej

Wpłynęło do Redakcji dnia 15 marca 1996 r.