ZESZYTY NAUKOWE POLITECHNIKI ŚLĄSKIEJ 1989

Seria: GÓRNICTWO z. 180 Nr kol. 1043

INTERNATIONAL CONFERENCE: DYNAMICS OF MINING MACHINES
DYNAMACH '89

Józef WOJNAROWSKI,
Andrzej NOWAK

Instytut Mechaniki i Podstaw Konstrukcji Maszyn
Politechniki Śl., Gliwice

MODELLING OF MINING MANIPULATOR IN MOTORS FORMALISM

Summary. In this paper the way of modelling of mining manipulator based on the motors formalism, as it is understood by Mises, has been formulated. The range of modelling includes the kinematic analysis, in the sense of screws velocity and acceleration and the dynamic analysis, from the description of wrench programs. It has been pointed out that kinetostatic balance of the manipulator can be achieved when the central line of wrench forces is collinear to the screw axis of wrench velocity. Graphic representation of recurrent procedure of calculations has been achieved by term of wrench graphs.

1. INTRODUCTION

The increase of mining output from the deeper and deeper deposits causes the change of methods technology and means of realization, by the use of automatization and robots, in the mining processes. Modelling the machines-manipulators is one of the ways of fulfilling complicated mining works with minimal part of mom-operator. Such trials have been described in the work [1]. In that paper great attention has been driven to the kinematic and dynamic analysis of mining manipulators as on essential step in the modelling of these machines.

The method of matrix transformation of co-ordinates so-called matrix of kinematic pairs transition has been applied in our research considerations. In this paper the way of modelling of mining manipulator with the use of motors formalism has been formulated [2]. Such an approach simplifes the kinematic and dynamic analysis of manipulator on the way of generating analytic algorithms [3]. The use of wrench reduction graphs makes easier the organizations in graphic representations.

2. KINEMATIC ANALYSIS OF MANIPULATOR IN REPRESENTATION OF WRENCHES

The model of mining manipulator has been shown in the diagram 1. The mechanism of the manipulator consists of the open chain of four links, the last one being the grab. Leaving out the local mobility of the grab, the third and the fourth links will be considered as one. The link 0 builds up the frame at the some time being the body of the machine. There are three spherical joints in the mechanism; the joint A has two degrees of freedom, the joint B has three degrees of freedom and the joint C again has two degrees of freedom. To each of these links a relative system of co-ordinates has been connected, the system (x_o, y_o, z_o) is motionless. The chain has mobility seven leaving out the local movements of the grab, because of the spherical joints, to kinematic and dynamic description of manipulator we have taken Euler's angles as general co-ordinates. They are shown in diagram 2 for each joint separately with the lines of nodes. Searching kinematic analysis of manipulator with the use of motors method, the division of joint movement has been achieved into three empty rotary movements, which does not demand the complicated from of matrix of transition for joint. In the presented method we have taken for each joint a separate (r_k-1) links of zero length, where r_k means a degree number of freedom. Such an approach makes possible researching kinematics of manipulator by the composition of simple rotary movements r links, where r means manipulator mobility.

In the diagram 3 we have shown the graph of the compound motor velocity of the mechanism for seven rotary movements as the results of the divisions of rotary joint movements into the component rotary movements.

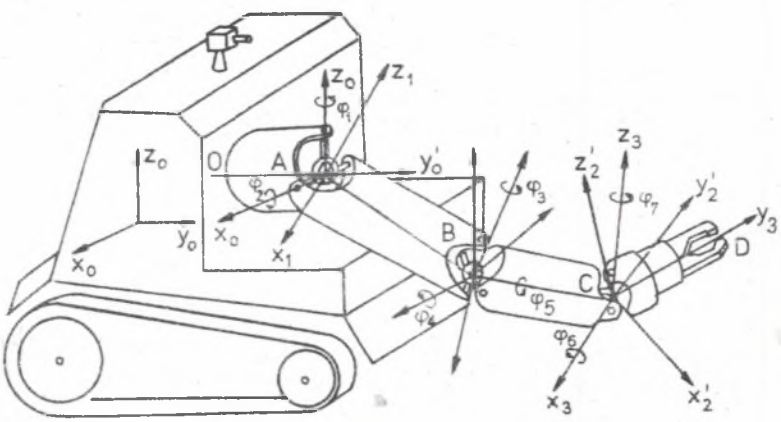

Fig. 1.

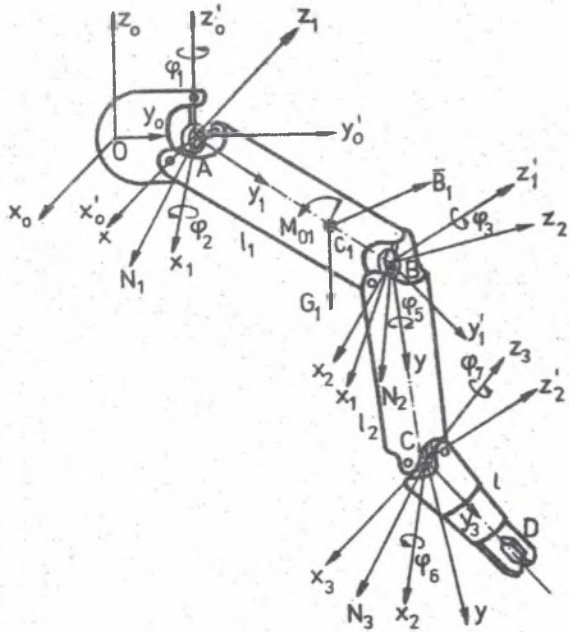

Fig. 2.

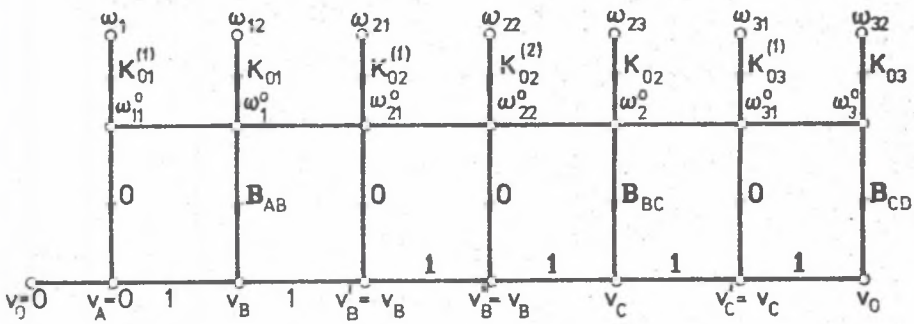

Fig. 3.

Matrices of movements shown in diagram 3 are:

$$K_{01}^{(1)} = \begin{bmatrix} c\varphi_1 & -s\varphi_1 & 0 \\ s\varphi_1 & c\varphi_1 & 0 \\ 0 & 0 & 1 \end{bmatrix}, \qquad K_{11} = \begin{bmatrix} 1 & 0 & 0 \\ 0 & c\varphi_2 & -s\varphi_2 \\ 0 & s\varphi_2 & c\varphi_2 \end{bmatrix}, \tag{1}$$

$$\mathbb{K}_{01} = \mathbb{K}_{01}^{(1)} \mathbb{K}_{11} \qquad \mathbb{K}_{02}^{(1)} = \mathbb{K}_{01} \mathbb{K}_{12}^{(1)} \tag{2}$$

$$\mathbb{K}_{12}^{(1)} = \begin{bmatrix} c\varphi_3 & -s\varphi_3 & 0 \\ s\varphi_3 & c\varphi_3 & 0 \\ 0 & 0 & 1 \end{bmatrix} \tag{3}$$

$$\mathbb{K}_{02}^{(2)} = \mathbb{K}_{02}^{(1)} \mathbb{K}_{12}^{(2)} \qquad \mathbb{K}_{02} = \mathbb{K}_{02}^{(2)} \mathbb{K}_{12}^{(3)} \tag{4}$$

$$\mathbb{K}_{12}^{(2)} = \begin{bmatrix} c\varphi_5 & 0 & -s\varphi_5 \\ 0 & 1 & 0 \\ s\varphi_5 & 0 & c\varphi_5 \end{bmatrix} \qquad \mathbb{K}_{12}^{(3)} = \begin{bmatrix} 1 & 0 & 0 \\ 0 & c\varphi_4 & -s\varphi_4 \\ 0 & s\varphi_4 & c\varphi_4 \end{bmatrix} \tag{5}$$

$$\mathbb{K}_{03}^{(1)} = \mathbb{K}_{02} \mathbb{K}_{23}^{(1)} \qquad \mathbb{K}_{03} = \mathbb{K}_{03}^{(1)} \mathbb{K}_{23}^{(2)} \tag{6}$$

$$\mathbb{K}_{23}^{(1)} = \begin{bmatrix} c\varphi_7 & -s\varphi_7 & 0 \\ s\varphi_7 & c\varphi_7 & 0 \\ 0 & 0 & 1 \end{bmatrix} \qquad \mathbb{K}_{23}^{(2)} = \begin{bmatrix} 1 & 0 & 0 \\ 0 & c\varphi_6 & -s\varphi_6 \\ 0 & s\varphi_6 & c\varphi_6 \end{bmatrix} \tag{7}$$

Reducing the graph we determine the motors velocity of pole:

1) $\quad v_A = \{\omega_1^{\,o},\ 0\}, \qquad \omega_1^{\,o} = \omega_{11}^{\,o} + \omega_{12}^{\,o} = \mathbb{K}_{01}(\omega_{11}^{*} + \omega_{12}^{*})$

2) $\quad v_B = \{\omega_2^{\,o},\ v_B\}, \qquad v_B = v_A + \mathbb{B}_{AB}\ \omega_1^{\,o},$ (8)

3) $\quad v_C = \{\omega_3^{\,o},\ v_{c3}\},$ (9)

$$\omega_2^{\,o} = \omega_1^{\,o} + \mathbb{K}_{02}^{(1)} \omega_{21}^{*} + \mathbb{K}_{02}^{(2)} \omega_{22}^{*} + \mathbb{K}_{02}\ \omega_{23}^{*} = \omega_1^{\,o} + \sum_{i=1}^{3} \omega_{2i}^{\,o}, \tag{10}$$

$$v_c = v_B + \mathbb{B}_{BC}\ \omega_2^{\,o}, \tag{11}$$

$$\omega_3^{\,o} = \omega_2^{\,o} + \mathbb{K}_{03}^{(1)}\ \omega_{31}^{*} + \mathbb{K}_{03}\ \omega_{32}^{*} = \omega_2^{\,o} + \omega_{31}^{\,o} + \omega_{32}^{\,o} \tag{12}$$

4) $\quad v_D = \{\omega_3^{\,o},\ v_D\},$ (13)

$$v_D = v_C + \mathbb{B}_{CD}\ \omega_3, \tag{14}$$

where: $\mathbf{B}_{AB}$, $\mathbf{B}_{BC}$, $\mathbf{B}_{CD}$ are antysymmetrical matrices of co-ordinates of points B,C,D in the local system of links co-ordinates,

$$\omega^*_{11} = \left[0,\ 0,\ \varphi_1\right]^T \qquad \omega^*_{12} = \left[\varphi_2,\ 0,\ 0\right]^T$$
$$\omega^*_{21} = \left[0,\ 0,\ \varphi_3\right]^T \qquad \omega^*_{22} = \left[0,\ \varphi_5,\ 0\right]^T \tag{15}$$
$$\omega^*_{23} = \left[\varphi_4,\ 0,\ 0\right]^T, \quad \omega^*_{31} = \left[0,\ 0,\ \varphi_7\right]^T, \quad \omega^*_{32} = \left[\varphi_6,\ 0,\ 0\right]^T$$

Next we determine the motors of pole acceleration on the base of equation:

$$a_A = 0\ ,$$
$$a_B = a_A + \mathbf{B}_{AB}\ \varepsilon_1^{\,o} + C_{AB}\ \omega_1^{\,o}\ , \qquad C_{AB} = \mathbf{B}_{AB}\ \omega_1^{\,o}\ ,$$
$$a_C = a_B + \mathbf{B}_{BC}\ \varepsilon_2^{\,o} + C_{BC}\ \omega_2^{\,o}\ , \qquad C_{BC} = \mathbf{B}_{BC}\ \omega_2^{\,o}\ , \tag{16}$$
$$a_D = a_C + \mathbf{B}_{CD}\ \varepsilon_3^{\,o} + C_{CD}\ \omega_3^{\,o}\ , \qquad C_{CD} = \mathbf{B}_{CD}\ \omega_3^{\,o}\ ,$$

$$\varepsilon_1^{\,o} = \omega^o_{11} \times \omega^o_{12}$$
$$\varepsilon_2^{\,o} = \omega^o_{11} \times \omega_2^{\,o} + \omega^o_{21} \times \omega^o_{22} + \omega^o_{21} \times \omega^o_{23} + \omega^o_{22} \times \omega^o_{23} \tag{17}$$
$$\varepsilon_3^{\,o} = \omega_2^{\,o} \times \omega_3^{\,o} + \omega^o_{31} \times \omega_{32}$$

and they are:

$$A_A = \{\varepsilon_1^{\,o},\ a_A\}, \qquad A_B = \{\varepsilon_2^{\,o},\ a_B\},$$
$$A_C = \{\varepsilon_3^{\,o},\ a_C\}\ , \qquad A_D = \{\varepsilon_4^{\,o},\ a_D\}. \tag{18}$$

The above dependencies and equations are easy to be programmed without the necessity of multiplication of materices and writing in complicated expression.

3. MOTORS IN KINETOSTATICS DESCRIPTION OF MANIPULATOR

The aim of the analysis is to determine the driving moments for links and the reactions in kinematic pairs. We assume that velocities and acceleration of links, describing the movements of the grab in the space are known. The kinetostatic analysis is conducted in the convection movement setting of the mechanism.

In the diagram (4) the active and passive power systems and the resistance to motion that work on the each link have been shown. P_1, P_2, P_3 stand for the instantaneous positions of axis of rotation of links along which there are situated the vectors of driving moments and moments of friction in joints.

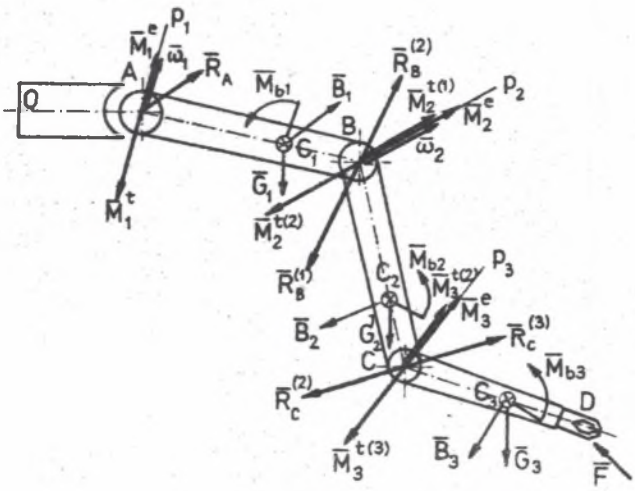

Fig. 4.

Forces operating on links are described by the corresponding motors of forces. The analysis begun with the last link of manipulator and is proved in the local systems of coordinates of links.

1. Link 3

The main motor of active and passive forces in the pole C is defined

$$M_c = \{W_3, M_c\}, \tag{19}$$

where $W_3 = B_3 + G_3 + F_3, \qquad B_3 = -m_3 a_{c3}, \tag{20}$

$$M_c = M_{b3} + r_{cc3} \times W_3, \quad M_{b3} = -\left[J_{c3}\,\varepsilon_3 + \omega_3 \times (J_{c3}\,\omega_3)\right] \tag{21}$$

$\mathbf{M}_{b3}$ is the moment of inertia counted according to Euler's formula, $\mathbf{K}_{03}$ is the absolute angle velocity of the link determined in the system of coordinates of the link 3, ε_3 is absolute angle acceleration of the link.

The motor of reaction in the pole C is determined:

$$M_c^r = \{ \mathbf{R}_c^{(3)}, \mathbf{M}_3^{t(3)} \} \tag{22}$$

and the relative motor of velocity:

$$V_c^* = \{ \omega_3, 0 \}, \tag{23}$$

where ω_3 is the relative angle velocity of the link.

The driving moment M of the link we define from the equation of power:

$$\mathbf{M}_3^e \, \omega_3^* + (M_c + M_c^r) \, V_c^* = 0 \tag{24}$$

from which we have:

$$M_3^e = M_3^t - (\mathbf{M}_{b3} + \mathbf{r}_{cc_3} \times \mathbf{W}_3) \, \mathbf{e}_3^* , \tag{25}$$

$$M_3^e = M_3^e \, \mathbf{e}_3^* , \qquad \mathbf{e}_3^* = \omega_3^* / |\omega_3^*| \tag{26}$$

The reaction in the pole C is:

$$\mathbf{R}_C^{(3)} = - \mathbf{W}_3 = - (\mathbf{B}_3 + \mathbf{G}_3 + \mathbf{F}_3). \tag{27}$$

The kinematic energy of the link in absolute movement is determined:

$$E_3 = 0.5 \, (V_{c3}^T \, B_3 \, V_{c3}) = 0,5 \, (\mathbf{m}_3 \mathbf{v}_{c3} + \omega_3^T \, \mathbf{J}_{c3} \, \omega_3), \tag{28}$$

where

$$V_{c3} = \{ \omega_3 , \mathbf{v}_{c3} \} \tag{29}$$

is the absolute motor of velocity in the centers of mass,

$$B_3 = \begin{bmatrix} \mathbf{m}_3 & 0 \\ 0 & J_{c3} \end{bmatrix} \tag{30}$$

is the matrix of inertia of the link.

On the basis (28) we count the reduced moment of inertia of the link:

$$J^{*}_{r3} = \frac{2\,E_3}{(\omega_3)^2} = \frac{V^T_{c3}\,B_3\,V_{c3}}{(\omega^{*}_3)^2} \tag{31}$$

2. Link 2

We make the reduction of motor (22) to the coordinates system of the link 2:

$$\mathbf{R}^{(2)}_c = -\,\mathbf{K}_{23}\mathbf{R}^{(3)}_C = \mathbf{K}_{23}\mathbf{W}_3 = \mathbf{W}^{(2)}_3\ , \tag{32}$$

$$\mathbf{M}^{t(2)}_3 = -\,\mathbf{K}_{23}\,\mathbf{M}^{t(3)}_3, \quad \mathbf{K}_{23} = \mathbf{K}^{(1)}_{23}\,\mathbf{K}^{(2)}_{23}. \tag{33}$$

In the pole B we define the main motor of link 2:

$$M_B = \{\mathbf{W}_2, \mathbf{M}_B\}\ , \tag{34}$$

where

$$\mathbf{W}_2 = \mathbf{B}_2 + \mathbf{G}_2 + \mathbf{R}^{(2)}_c = \mathbf{B}_2 + \mathbf{G}_2 + \mathbf{W}^{(2)}_3, \tag{35}$$

$$\mathbf{M}_B + \mathbf{M}_{b2} + \mathbf{r}_{BC_2} \times \mathbf{W}_2 + \mathbf{r}_{C_2C} \times \mathbf{W}^{(2)}_3\ , \tag{36}$$

where

$$\mathbf{M}_{b2} = -\left[\mathbf{J}_{c2}\,\boldsymbol{\varepsilon}_2 + \boldsymbol{\omega}_2 \times (\mathbf{J}_{c2}\,\boldsymbol{\omega}_2)\right] \tag{37}$$

In the pole B the motor of reaction is defined:

$$M^{r}_B = \{\mathbf{R}^{(2)}_B\ , \mathbf{M}^{t(2)}_2\} \tag{38}$$

We determine the driving moment of the link using the equation of power:

$$\mathbf{M}_2{}^{e}\,\boldsymbol{\omega}_2 + (M_B + M_B{}^{r})\,V^{*}_B = 0\ , \tag{39}$$

where

$$V^{*}_B = \{\boldsymbol{\omega}^{*}_2,\ 0\}, \quad \boldsymbol{\omega}^{*}_2 = \mathbf{K}^{T}_{02}\,\boldsymbol{\omega}^{*}_2\ {}^{o}. \tag{40}$$

Using the equation (39) we count:

$$M_2^{\bullet} = M_2^{t(2)} - (M_{b2} + r_{BC_2} \times W_2 + r_{C_2C} \times W_3^{(2)})\, e_2^* \tag{41}$$

$$M_2^{\bullet} = M_2^{\bullet}\, e_2^* , \qquad e_2^* = \omega_2^* / |\omega_2^*| \tag{42}$$

The reaction in the pole B is:

$$R_B^{(2)} = - W_2 = - (B_2 + G_2 + W_3^{(2)}) . \tag{43}$$

We count the kinetic energy of the link by:

$$E_2 = 0,5\, (V_{C2}^T\, B_2\, V_{C2}) = 0,5\, (m_2 v_{C2}^2 + \omega_2^T\, J_{C2}\, \omega_2), \tag{44}$$

where

$$V_{C2} = \{\omega_2, \; v_{C2}\} , \qquad B_2 = \begin{vmatrix} m_2 & 0 \\ 0 & J_{C2} \end{vmatrix} \tag{45}$$

and the reduced moment of inertia:

$$J_{r2}^* = \frac{V_{C2}^T\, B_2\, V_{C2}}{(\omega_2^*)^2} . \tag{46}$$

3. Link 1

The kinetostatic analysis of the link 1 is done at the last step. We make the reduction of motor (38) to the system of coordinates of the link:

$$R_B^{(1)} = - K_{12}\, R_B^{(2)} = K_{12}\, W_2 = W_2^{(1)} , \tag{48}$$

$$M_2^{t(1)} = - K_{12}\, M_2^{t(2)}, \qquad K_{12} = K_{12}^{(1)}\, K_{12}^{(2)}\, K_{12}^{(3)} . \tag{49}$$

We define the main motor in the pole A:

$$M_A = \{ W_1, \; M_A \} \tag{50}$$

where

$$W_1 = B_1 + G_1 + W_2^{(1)}, \qquad B_1 = - m_1\, a_{C1} \tag{51}$$

$$M_A = M_{b1} + r_{AC_1} \times W_1 + r_{C_1B} \times W_2^{(1)} \tag{52}$$

$$M_{b1} = - \left[J_{C1}\, \varepsilon_1 + \omega_1 \times (J_{C1}\, \omega_1) \right] \tag{53}$$

The motor of reaction in thge pole A is determined:

$$M_A^{\,r} = \{ R_A, M_1^{t(1)} \} \tag{54}$$

Using the equation of power:

$$M_1^{\,e}\, \omega_1^* + (M_A + M_A^{\,r})\, V_1^* = 0, \tag{55}$$

where

$$V_1^* = \{ \omega_1^* , 0 \}$$

is the relative motor then we define the driving momennt of link:

$$M_1^{\,e} = M_1^{\,t} - (M_{b1} + r_{AC_1} \times W_1 + r_{C_1B} \times W_2^{(1)})\, e_1^* , \tag{56}$$

$$M_1^{\,e} = M_1^{\,e}\, e_1^* , \qquad e_1^* = \omega_1^* / |\omega_1^*| \tag{57}$$

The reaction in the node A is:

$$R_A^{(1)} = - W_1 = - (B_1 + G_1 + W_2^{(1)}). \tag{58}$$

The reduced moment of inertia of the link determines dependence:

$$J_{r_1}^* = \frac{V_{C1}^{\,T}\, B_1\, V_{C1}}{(\omega_1^*)^2} \tag{59}$$

where

$$V_{C1} = \{ \omega_1 , v_{C1} \}$$

is the absolute motor of velocity in the center of mass.

The reduced moments of inertia of links refer to their instantaneous axis of rotation. Now we take under the consideration the kinetostatic balance of the manipulator which will be described on the basis of the link 1. The main motor M_A is reduced to the wrench of forces:

$$F_1 = \{ W_1 , M_{S1} \} \tag{60}$$

where

$$M_{S1} = \varkappa_1 W_1 , \qquad \varkappa_1 = \frac{\tau_1 , M_A}{|W_1|} , \qquad \tau_1 = W_1 / |W_1| \tag{61}$$

We define the equation of the central line of the wrench of forces:

$$l_1 = x_{Q1} + t \, \tau_1 \tag{62}$$

where

x_{Q1} means the coordinates of the arbitrary point of straight line. In particular we define the point situated nearest to the pole A:

$$r_{AQ_1} = \frac{\tau_1 \times M_A}{|W_1|} \tag{63}$$

The reduction of the velocity motors of the link to the kinematic wrench is done, too:

$$S_1 = \{ \omega_1 , v_{S1} \} , \tag{64}$$

where

$$v_{S1} = \mu_1 \omega_1 , \qquad \mu_1 = \frac{\omega_1 , v_A}{|\omega_1|} . \tag{65}$$

Because velocity $v_A = 0$ wrench S_i is reduced to motor:

$$S_1 = \{ \omega_1 , 0 \} \tag{66}$$

and the wrench line (the wrench axis) overlaps with the instant axis of rotation P_1.

The link si balanced kinetostatically when the central line is parallel or overlaps with the wrench line, in this case with the instantaneous axis of rotation of the link. It means that the driving moment of the link is the reverse vector to the moment of resistance to motion and the reaction in the node A has the direction of the instantaneous axis of rotation. The matter of kinetostatic balance of open chain has been described in details in works [4, 5].

5. CONCLUSIONS

The Formalism of the motors theory makes possible formulating the kinematic and dynamic analysis method of mining manipulators. It makes easier the interpretations of balancing of these machines as the arrangement of changeable structure. The presented way of modelling and described algorithms can be use in the designing processes specially in the mining robotization.

LITERATUR

[1] Черноусько Ф.Л., Градецкий В.Г., Фомин Л.Ф., Киклевич Ю.Н., Котенко П.И., Ковалев А.М., Елфимоб В.С.: Механика шахтных робототехнических комплексов с базовым мобильным манипулятором. Инстытут Проблем Механики Академии Наук СССР, Москва 1987.

[2] Mises R.: Motorrenrechnung. Zeitschrift fuer Angewandte Mathematik und Mechanik. Berlin, 1926.

[3] Wojnarowski J., Nowak A.: Graph of wrenches in the kinematical analysis of the robotics-manipulators. Zbiór refer. XI Konferencji TMiM. Z.N. Politechniki Śl. s.Mechanika nr 86, Gliwice-Zakopane 1987, (in Polish).

[4] Wojnarowski J., Nowak A.: On the balance of mechanism of manipulator in the formalization of screws. Refer. XXVII Symposium "Modelling in Mechanics", Gliwice-Wisła, 1988 (in Polish).

[5] "Identyfikacja obiektów badań - modelowanie wyodrębnionych systemów i podsystemów robotów i manipulatorów metodą grafów". Praca wykonana pod kierunkiem J.Wojnarowskiego w IMiPKM Politechniki Śl. w ramach CPBR 7.1 "Roboty przemysłowe", Gliwice 1987 (etap II).

Recenzent: Prof. dr hab. inż. Bohdan Mochnacki

MODELOWANIE MANIPULATORA GÓRNICZEGO W FORMALIZMIE MOTORÓW

S t r e s z c z e n i e

W pracy bazując na formalizmie motorów w sensie Misesa, sformułowano sposób modelowania manipulatorów stosowanych w górnictwie. Zakres modelowania obejmuje analizę kinematyczną w ujęciu motorów prędkości i przyspieszeń oraz analizę dynamiczną w opisie skrętników sił aż do generowania algorytmów i programów obliczeniowych. W pracy ponadto wykazano, że wyrównoważenie kinetostatyczne manipulatora można uzyskać, gdy linia centralna skrętnika sił jest kolinearna z osią śrubową skrętnika prędkości. Dzięki zastosowaniu grafów skrętów uzyskano graficzną reprezentację rekurencyjnej procedury obliczeń.

МОДЕЛИРОВАНИЕ ШАХТНОГО МАНИПУЛЯТОРА
В ФОРМАЛИЗМЕ ВИНТОВ

Р е з ю м е

В работе даются способ моделирования шахтного манипулятора при использованию формализма винтов в смысле Мизеса. Область моделирования принимает кинематический анализ методом винтов для определения скорости и ускорений а тоже динамический анализ в описанию винтов, которые даются возможность построения разчетных алгоритмов. В работе даються условие кинетостатического уравновешивания манипулятора. Используясь граф винтов придаваються геометрическую интерпретацию алгоритма редукции винтов.