ZESZYTY NAUKOWE POLITECHNIKI ŚLĄSKIEJ 1994
Seria: ENERGETYKA z. 120 Nr kol. 1260

Vratislav FIBINGER
VSB Technicka univerzita, Ostrava

EXPERIENCE WITH BITUMINOS COAL COMBUSTION IN FLUIDIZED BED–BOILERS IN THE CZECH REPUBLIC

Summary. For the combustion of the bituminous black coal in the Czech Republic three kinds of fluidized bed–boilers are used. The paper contents the description of their construction and operation. Some problems of the most widespread IGNIFLUID boilers have been described, especially the problem of the decreasing of solid emissions under mandatory limit.

DOŚWIADCZENIA W DZIEDZINIE SPALANIA WĘGLA KAMIENNEGO W PALENISKACH FLUIDYZACYJNYCH W REPUBLICE CZESKIEJ

Streszczenie. W Republice Czeskiej do spalania węgli kamiennych stosowane są trzy rodzaje kotłów fluidyzacyjnych. Praca zawiera opis ich konstrukcji i zasad eksploatacji. Na podstawie badań eksperymentalnych przeanalizowano niektóre problemy występujące w najczęściej używanych kotłach systemu IGNIFLUID, włącznie z problematyką przekraczania dopuszczalnych limitów emisji stałych składników szkodliwych.

ERFAHRUNGEN MIT DER VERBENNUNG VON STEINKOHLEN IN DEN WIRBELSCHICHTFEUERUNGEN IN DER TSCHECHISCHEN REPUBLIK

Zusammenfassung. Drei Arten von Wirbelschichtfeuerungen sind in der Tschechischen Republik benutzt. Die wichtigsten konstruktiven und betriebsmäßigen Eigenschaften solcher Feuerungen wurden beschrieben. Einige Probleme bei dem Betrieb von den IGNIFLUID–Kesseln wurden, aufgrund der experimentellen Untersuchungen, analysiert.

I. THE CONCEPTION OF FLUIDIZED BED–BOILERS IN THE CZECH REPUBLIC

Bituminous coals with low content of combustible sulphur are becoming the ecological fuel of the future. Various technologies of combustion for these types of bituminous coal are therefore studied in the Czech Republic and the most promising one seems to be fluidized bed combustion. Its theoretical advantages then led to the development of two fundamentally different types of boilers. The boilers are different in that:

1.1 the fluidized bed of the stationary type is predominantly formed by inert particles, while solid fuel in the bed is burned with an excessive amount of air. The boiler's heat–exchange area is partly submerged into the fluidized bed.

A steam boiler used in heating plants, with a stationary fluidized combustion bed and the oputput od 25 $t \cdot h^{-1}$ steam, in which limestone is used for desulphurization in the fluidized bed, can serve as an example of the first conception. The optimum temperature in the fluidized bed is maintained by regulating the total–air supply into two horizontal levels of the fluidized bed, in accordance with the Czech Republic patent.

Due to the complexity of its construction as well as its economically exacting character, this type of boiler is not built any more.

1.2. the fluidized bed is formed by solid–fuel particles only, and the characteristic feature of this conception is the process of burning with an under–stoichiometric amount of fluidized primary air. During partial gasification of the coal, it is mostly the volatile matter that burns in the bed. The process of combustion should be completed in the next area above the fluidized bed, by the secondary combustion air input.

The technically simpler method of partial coal gasification in the fluidized bed is industrially utilized in boilers of the DUKLAFLUID type, which are built in two different construction types.

The first one is a fluidized (bed) gasification with a fixed grate preceding the furnace of a classical Fig. 2.a. In the second construction type, the fluidizal bed is in the bottom part of the vertical combustion chamber (Fig. 2.b.) The particles that are carried upwards from the bed, fall back from the widening area in front of the combustion area (a form of inner circulation of particles). These boilers do not return fly ash back to the fluidized bed, and are therefore more siutable for brown coals, although sludge and bituminous coal parting can be burned when combined with combustible liquid wastes.

The most widespread type of fluidized bed–boiler for bituminous coal is the licensed IGNIFLUID boiler (Babcock Atlantic), produced by the Czech firm CSK as a steam boiler with the output of 12 – 115 $t \cdot h^{-1}$ or as a hot water boiler with heat efficiency ranging from 10 to 170 MW – Fig. 3.

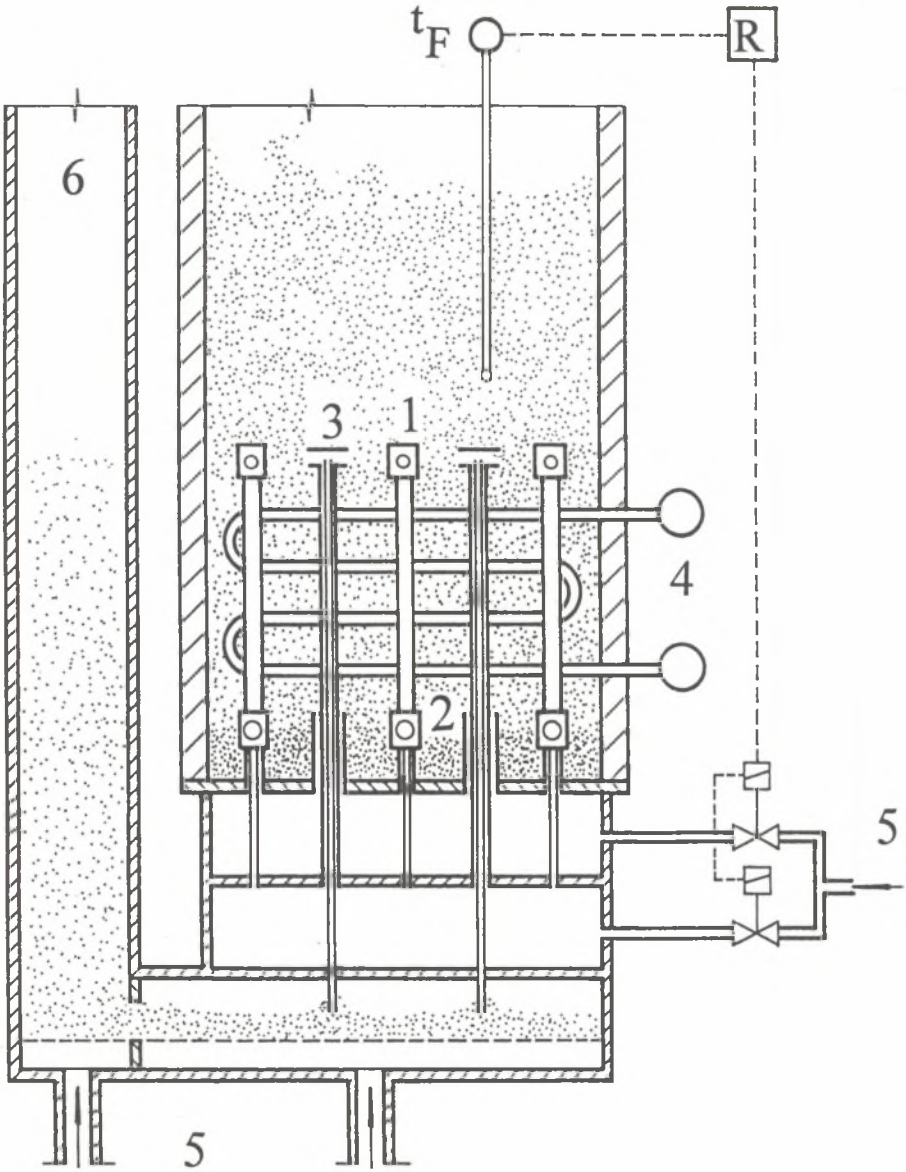

Fig. 1. Principle of coal input and temperature regulation in stationary fluidized bed (Czech steam boiler): 1, 2 – air nozzels, 3 – fuel nozzels, 4 – water cooling system, 5 – air input, 6 – coal input

Rys. 1. Sposób doprowadzenia paliwa i regulacji temperatury w stacjonarnym złożu fluidalnym (kocioł czeski): 1, 2 – dysze powietrzne, 3 – dysze paliwowe, 4 – system chłodzenia wodnego, 5 – doprowadzenie wody, 6 – doprowadzenia paliwa

During partial combustion, an under–stoichiometric amount of primary air is brought into the wedge–shaped fluidized bed at the front part of the angular grate, (up to three of four zones). Large, non–fluidized fuel particles burn low in the next part of the grate, and together with granulated slag are carried away into the slag removing equipment.

Combustible combustion products and fine particles carried out of the fluidized bed are burned by the secondary air in the secondary zone above the grate at the temoerature of 1100°C. Because the solid particles that are carried out of the furnace contain unburned carbon, they are pneumatically returned from the ash separator back above the grate, in front of the rear furnace wall.

The advantages advertised by the producer, i.e. combustion of unprepared coal, almost a ten times smaller width of the grate than it is usual standard boilers with the same output, removal of all solid bottoms from combustion

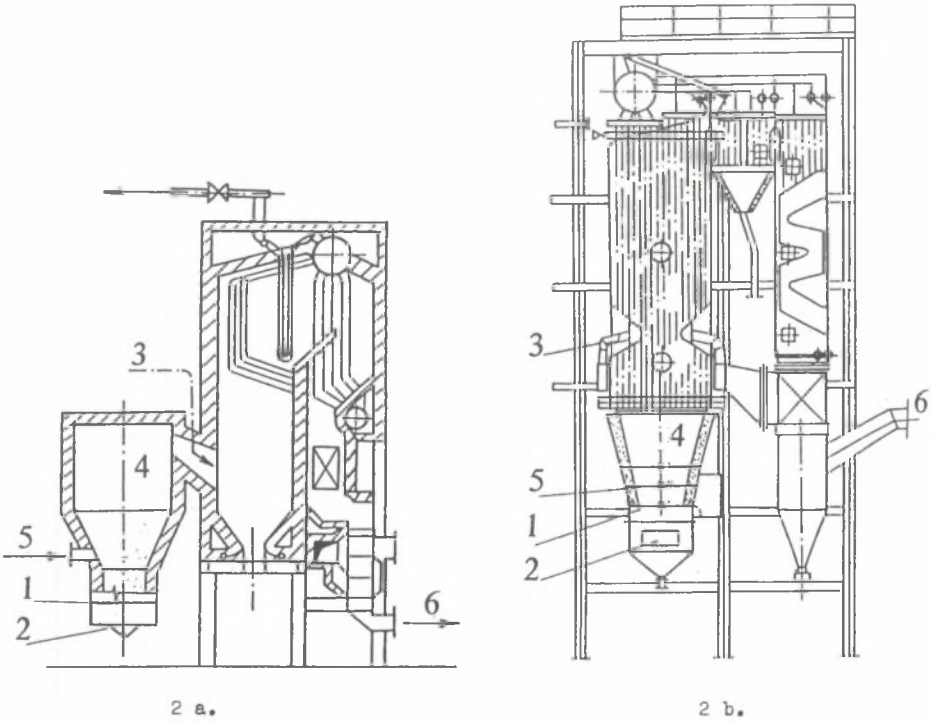

Fig. 2. DUKLAFLUID boilers: 1 – Fluidized bed grate, 2 – Primary air input, 3 – Secondary air input, 4 – Furnace with fluidized bed, 5 – Fuel input, 6 – Flue gases output

Rys. 2. Kotły DUKLAFLUID: 1 – ruszt fluidyzacyjny, 2 – wlot powietrza pierwotnego, 3 – wlot powietrza wtórnego, 4 – palenisko ze złożem, 5 – wlot paliwa, 6 – wylot spalin

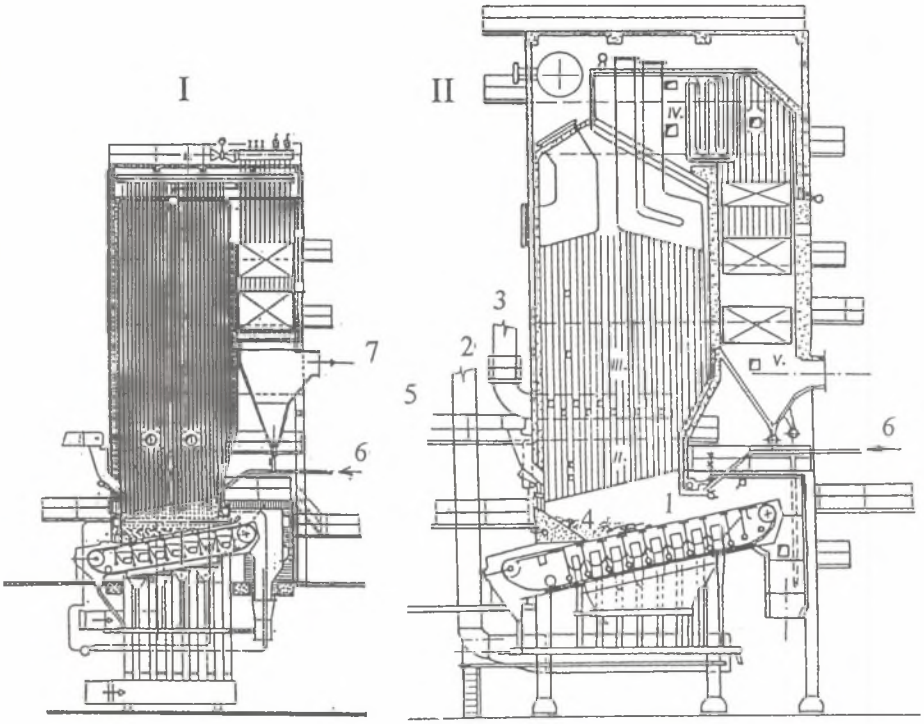

Fig. 3. General scheme of Ignifluid boilers: I.) hot water, II.) steam boiler: 1 – Travelling grate of the fluidized bed, 2 – Primary air input, 3 – Secondary air input, 4 – Fluidized bed, 5 – Fuel input, 6 – Recirculation of fly ash, 7 – Flue gases output

Rys. 3. Schemat ogólny kotła Ignifluid: I.) kocioł wodny, II.) kocioł parowy: 1 – ruszt złoża fluidalnego, 2 – wlot powietrza pierwotnego, 3 – wlot powietrza wtórnego, 4 – złoże fluidalne, 5 – wlot paliwa, 6 – recyrkulacja lotnego popiołu, 7 – wylot spalin

only in clinker, large output regulation range (30 – 100%), and a fast start from a long–term warm reserve, should combine the advantages of fluidized bed combustion with the combustion on a travelling grate of a standard stoker–fired boiler.

II. PROBLEMS THAT OCCUR DURING OPERATION OF THE BOILER AND THEIR ORIGIN

The advantages and merits of the DUKLAFLUID and IGNIFLUID boilers advertised by the producer, were not fully proved. On the contrary, many problems occured during operation of the boilers and numerous complex

diagnostic measurements were carried out in order to explain them. Results of these measurements proved that the quality of combustion and the period of fail safe operation are limited mainly by the quality (granulometry) of fuel, by primary air regulation (especially in the atypically–shaped fluidized bed of the IGNIFLUID boiler) and by an unsuitable design of some parts of the boiler. These are the specific problems studied in more detail in the following paragraphs.

The fuel is bituminous coal with the (grain) size od 15 mm (the maximum size of 20 mm), with low content of water – 8%, and with ash content ranging from 8 – 15%. The two following parameters – fuel efficiency for the mixture of coal and parting in the range of 19 to 23 MJ · kg^{-1}, and for pure coal of up to 30 MJ · kg^{-1}, are values advertised by the producer. At present, the proportions of fine fractions (i.e. grains smaller than 4 mm in diameter) have been increasing considerably as a result of the mining technology used – Fig. 4.

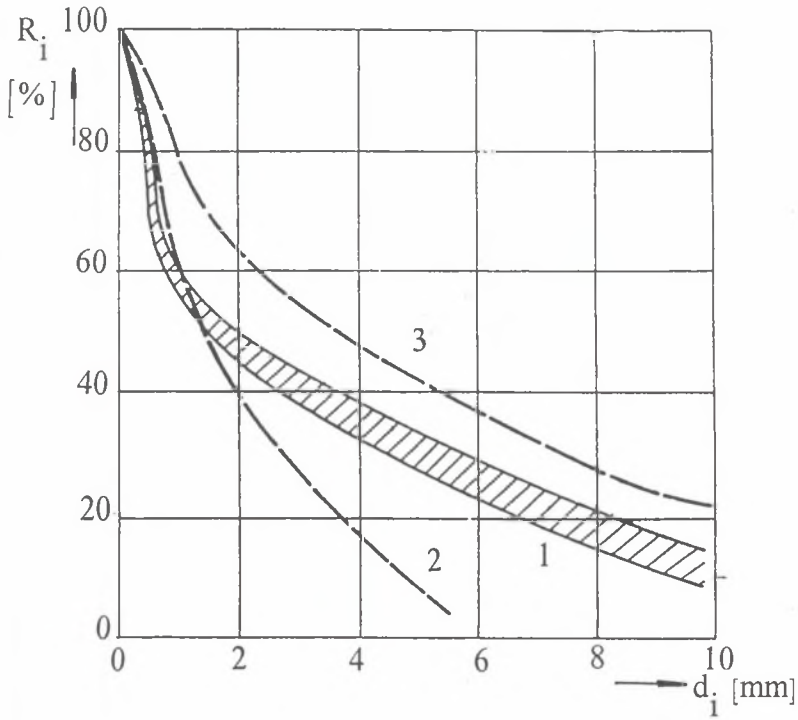

Fig. 4. Granulometric size distribution of coals used in IGNIFLUID boilers: 1 – present bituminous coal Ostrava, 2 – DONECK – anthracit, 3 – primary energetic coal

Rys. 4. Skład granulometryczny węgli spalanych w kotłach IGNIFLUID: 1 – ostrawski węgiel kamienny, 2 – antracyt doniecki, 3 – dotychczasowy węgiel energetyczny

Coal particles diminish their size in the process of burning into the fluidized bed, so the proportion of fine fractions in the bed becomes still higher. The precondition for complete burn–up is that the particle remains long enough within the conditions of reaction temperature and air supply (= reaction conditions), i.e. in the fluidized bed. In the given air regime in the fluidized bed, the particles that will fluidize will only be those, the size of which corresponds with the interval between the minimum fluidization velocity and the falling velocity at which fine fractions fly away from the bed at intervals shorter than one second, while the coarse coal grains do not fluidize and burn low in the fixed bed on the grate.

The situation is ilustrated in Fig. 5, which outlines the calculated areas of the fixed and fluidized bed, and areas of pneumatic transport for different sizes of round particles of ashes, depending on the velocity of the air (w_0) at the temperature of 800°C. The fig. shows values for two different particle concentrations in the bed that have been determined by the porosities of = 0.4 and = 0.5. For instance, the calculation for the velocity of $w_0 = 1.5\ m \cdot s^{-1}$ implies that particles larger than 1.6 mm in diameter will not fluidize, and particles smaller than 0.27 will be carried away from the bed.

The primary air brought into the bed by the grate, has to ensure the fluidization of the fuel particles, but its amount is limited by the condition of under–stoichiometric combustion (maintaining of the bed temperature under the softening–point temperature of the ash i.e. at about 900°C.) It is therefore necessary that exothermic combustion reactions between volatile combustible matter (mainly hydrocarbon) and carbon, and endothermic reactions must occur.

In the second combustion zone, as the secondary air is being supplied, carbon from fine particles carried out and gaseous combustible matter burn and consequently increase the temperature in this part of the furnace to about 1100 – 1150°C.

At this temperature, particles of the ash matter sinter into larger grains, fall back on the lateral banks along the grate and are carried out on the grate, together with the burning, non–fluidizing fuel.

Adjusting the optimal regime of fluidization air in boilers with fixed grate and stationary fluidized bed is technically simple. Problems occur in boilers with an oblique travelling grate, where the supplied air has to be distributed into separated zones (under the fluidized bed) with different static pressures. With the length of zone of 0.8 – 1 m and with its gradient, it is not possible to ensure the same air flow for the whole area of the zone, as is obvious from Fig. 6.

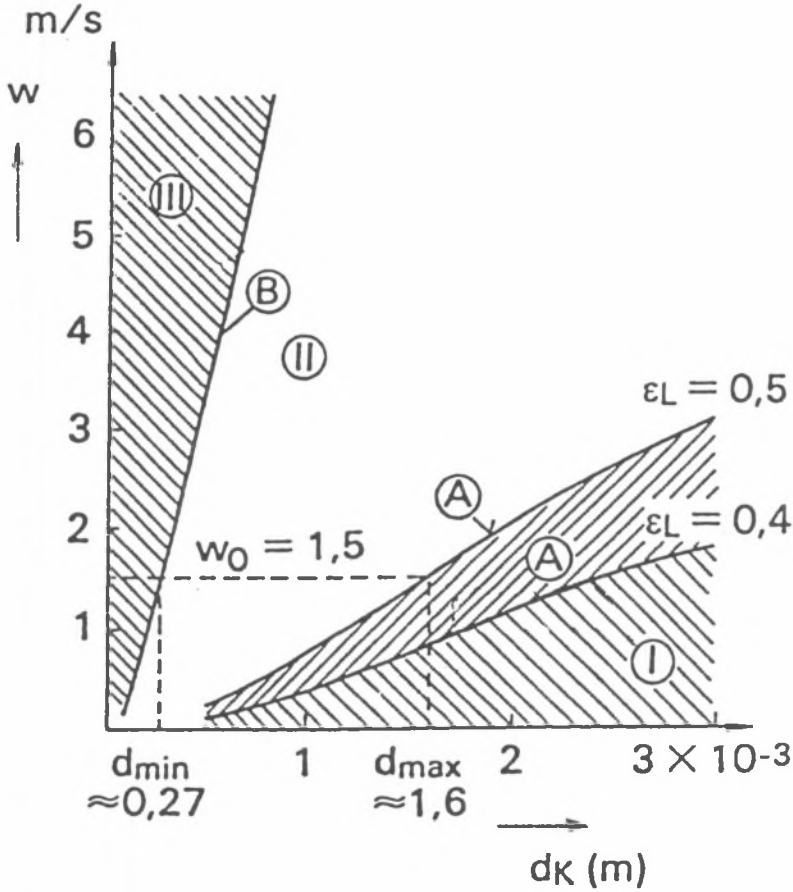

Fig. 5. Diagram of fluidization regimes: I – Range of fixed bed, II – Range of fluidized bed, II– Range of pneumatic transport, Curve A – Minimum fluidization velocity, Curve B – Falling velocity, Velocity are estimated by the expressions:

$$w_A = 42{,}9 \cdot \frac{\mu}{d_k \cdot \rho_g} \frac{1-\varepsilon_L}{\varphi_S}\left(\sqrt{1 + 3{,}1 \cdot 10^{-4} \cdot \frac{\varepsilon_L^3 \cdot \varphi_s^3}{(1-\varepsilon_{L,})^2} \cdot Ar} - 1\right), \quad [m \cdot s^{-1}]$$

$$A_r = \frac{d_K^3 \cdot (\rho_S - \rho_g) \cdot \rho_g \cdot g}{\mu^2}, \quad [-]; \qquad w_B = 18 \frac{\mu}{d_K \cdot \rho_g} \frac{1-\varepsilon_L}{\varphi_S}\left(\sqrt{1 + \sqrt{\frac{A_r}{9}}} - 1\right)$$

where μ – viscosity; ρ_S, ρ_g – specific density ; φ_S – shape factor

Rys. 5. Obszary fluidyzacji: I – złoże stałe, II – złoże fluidalne, II – obszar transportu pneumatycznego, krzywa A – minimalna prędkość fluidyzacji, krzywa B – prędkość opadania

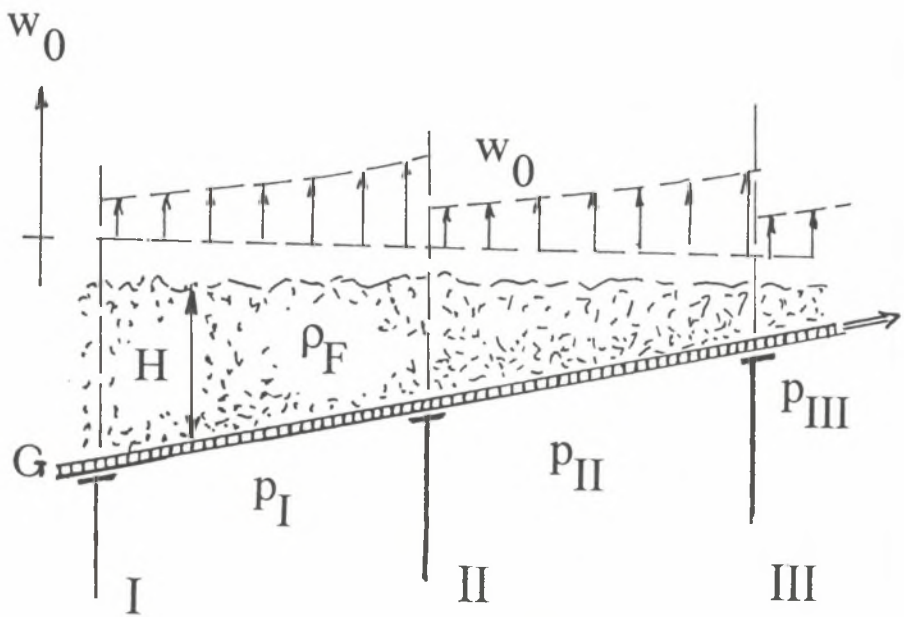

Fig. 6. Different gas velocity in IGNIFLUID fluidized bed: I, II, III – zones of primary air, G – moving grate leaned with a positive gradient

Rys. 6. Przebiegi prędkości gazu w złożu IGNIFLUID: I, II, III – strefy powietrza pierwotnego, G – pochylony ruszt wędrowny

The velocity is calculated from a simplified relation:

$$w_0 = \sqrt{\frac{p_1 - \rho_F \cdot g \cdot H_F}{1 + \xi \cdot \left(\frac{s}{s_0}\right)^2 \cdot \rho_g}} \quad [m \cdot s^{-1}]$$

where

p_I – is the static pressure in the zone above the grate (Pa)
ρ_F, ρ_g – is the mean specific weight of the fluidized bed and air ($kg \cdot m^{-3}$)
H_F – the height of fluidized bed above the grate (m)
ξ_R – drag coefficient of the grate (–)
S – surface of the grate (m^2)
S_0 – free cross section of the grate (m^2)

During its operation, it was proved that the boiler is highly sensitive to the distribution of primary air and to its regulation during output changes in the

furnace. When the air flow is increased for the same amount of fuel supplied, the fluidized bed lapses into a combustion regime with a higher temperature, which consequently results in slagging inside the furnace. This situation was simulated in a simplified mathematic model of the IGNIFLUID furnace with input values established experimentally in a real furnace. The influence of the changes in air–flow regime on the temperature in the fluidized bed is obvious from the calculation in Fig. 7.

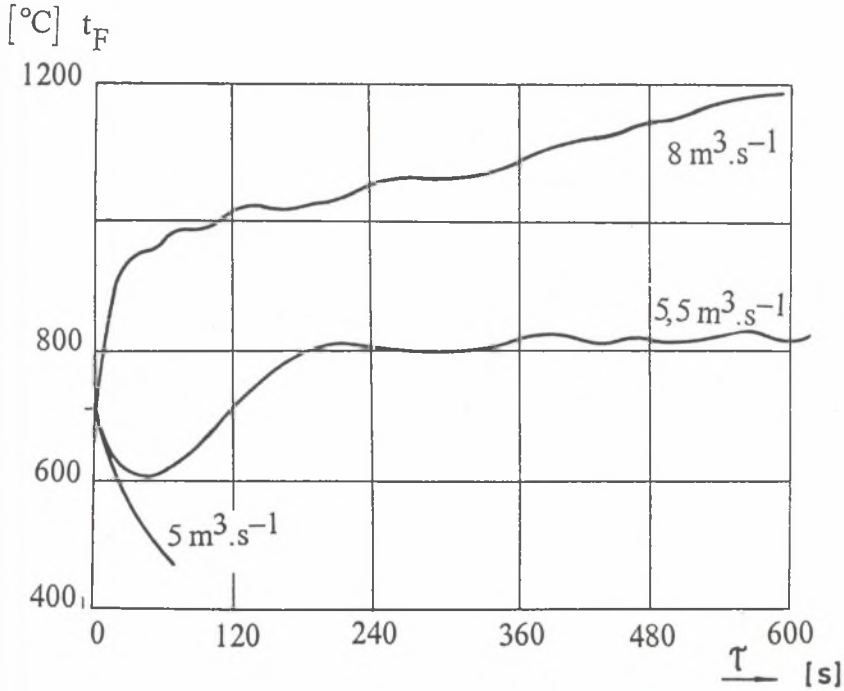

Fig. 7. The calculated bed temperature in time by various flow of primary air

Rys. 7. Obliczone temperatury złoża w funkcji czasu dla różnych strumieni powietrza pierwotnego

The calculated values here are well in accordance with the experience of the users of these boilers

Recirculation of particles that are collected at the end of the boiler and transported back to the furnace pneumatically is another one of the IGNIFLUID boiler's specific problems. As a rule, the velocity of combustion products in the furnace is higher that 5 $m \cdot s^{-1}$, which, at the temperature of 850°C, corresponds with the fall velocity of a particle 1.5 mm in diameter. This

means that almost 20% of smaller particles in the partially burned fuel in the fluidized bed and in the furnace are carried away from the boiler in combustion products.

This fact was experimentally confirmed by measurements taken in several boilers at different heat efficiecies. During complex investigation of the combustion process, samples were drawn off at the end of the furnace by an water cooled probe, as is described in Fig. 8.

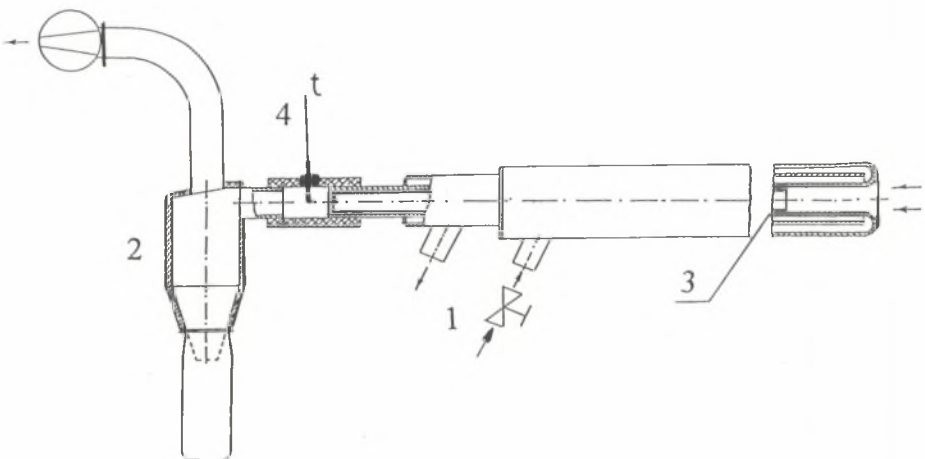

Fig. 8. Water cooled probe for solid particles from flame: 1 – cooling water input (regulated), 2 – cyclone to separate solid particles, 3 – thermal isolation tube, 4 – temperature control

Rys. 8. Chłodzona wodą sonda dla poboru stałych cząstek z płomienia: 1 – dopływ wody, 2 – cyklon do oddzielania cząstek pyłu, 3 – izolacja termiczna, 4 – regulacja temperatury

The temperature of the cooled sample is kept above the dew–point by adjusting the inner insulation pipe in the water–cooled mantle, so in the cyclone collector, particles over 30 μm are collected in a dry condition. Indeed, granulometric analysis of the extracted samples proves the occurrence of more than 60% of particles larger than 0.5 mm in diameter. (Fig. 9. Curves 3^x, 1^x).

These particles are carried out of the furnace sooner than when they are completely burned, and that means a considerable loss in the thermal balance of the boiler. Measuring the mass balance and heat efficiency in a boiler with the output of 110 th^{-1} shows that the loss in the combustible matter during the removal of unburnt solid particles in this boiler was about 9%, and that was for the average content of combustible matter in the range of 50 – 80% (Fig. 9. Curves 1, 2, 3). That is why IGNIFLUID boilers pneumatic return all solid particles from the end of the boiler back to the furnace, above the end of

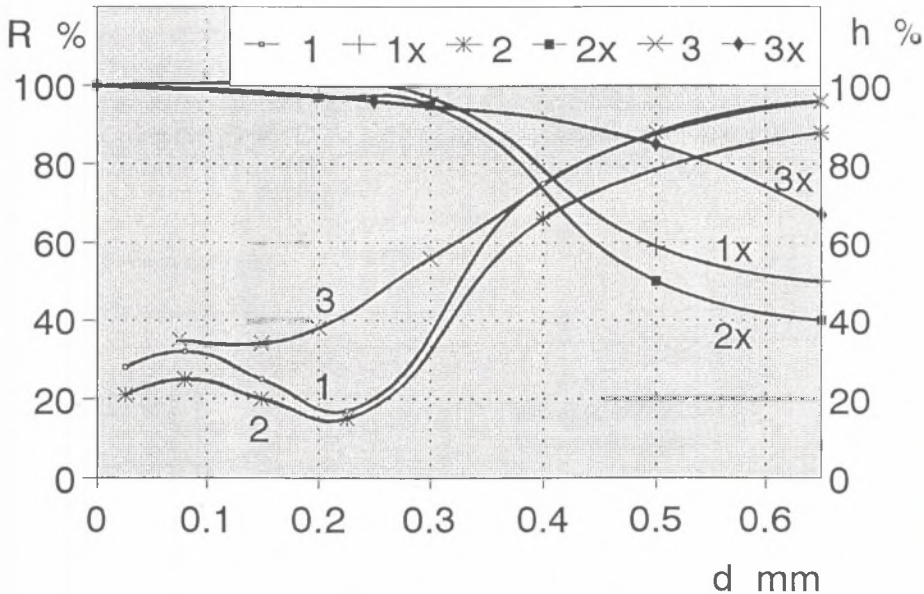

Fig. 9. Granulometric size distribution of recirculating particles (R%) with the content of combustible matter (h%)

Rys. 9. Rozkład granulometryczny cząstek recyrkulowanych (R%) oraz zawartość części palnych (h%)

the grate. The total length of a grain's stay in the furnace during recirculation is supposed to be grand total of all its passages through the furnace. The particle cools down and burns out between its individual passage intervals through the furnace. Every time in enters the furnace again, it is exposed to repeated heat shocks, which contribute to its disintegration and better burn–up.

It is possible to estimate the recirculation multiple for complete burn–up of a round particle of bituminous coal from the calculated period of its burn up and from its fly–ash velocity.

Fig. 10 is valid for the temperature of 850°C, for a 17.5 m high furnace, for ascending combustion products velocities of $w_0 = 3.5\ m \cdot s^{-1}$ and for the coke–particle ignition temperature of 600°C. An analysis of the extracted recirculated particles proved that the burning up of coarser grains is substantially slower than in particles of smaller sizes. Fig. 11.

Recirculating of the returned removal from the boiler increases concentration of particles in the boiler's traction. According to the diagram of mass flow in Fig. 11, describing the proportional trapping of particles in the furnace β_F,

efficiency of the dust separator η_p, the amount of particles that are carried out (S_k) and recirculated (S_R).

$$S_k = S_F \cdot (1 - \beta_F) \quad [kg \cdot s^{-1}]$$
$$S_R = S_k \cdot \eta_p \quad [kg \cdot s^{-1}]$$

while the fuel (S_0) and the recirculation (S_R) bring a certain amount of particles into the furnace, and the amount is then:

$$S_F = S_0 + S_R \quad [kg \cdot s^{-1}]$$

The amount that is being carried away in the slag is:

$$S_z = S_F \cdot \beta_F \quad [kg \cdot s^{-1}]$$

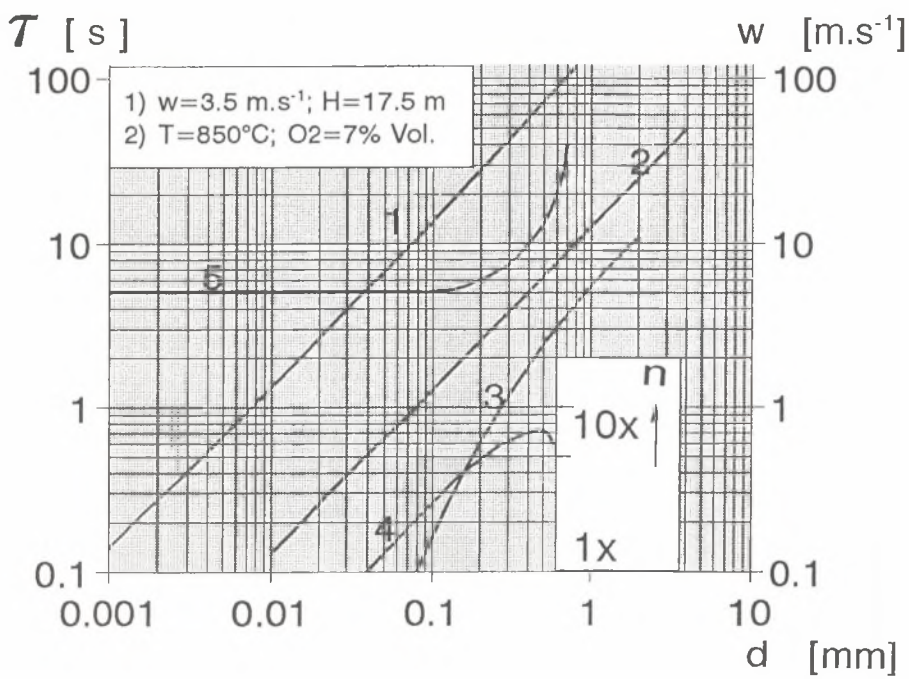

Fig. 10. Time – gas velocity diagram for combustion of round coal particles: Curve 1 – Bituminous black coal, 2 – Lignite brown coal, 3 – Falling velocity, 4 – The recirculation multiple (n) for complete burn–up of black coal, 5 – The passage time through the furnace

Rys. 10. Wykres czasowo–prędkościowy dla spalania okrągłych ziaren węgla

and the amount escaping into the atmosphere with the fly ash in that

$$S_u = S_k \cdot (1 - \eta_p) \quad [kg \cdot s^{-1}]$$

In these conditions, the amount of recirculated removal equals:

$$S_R = S_0 \cdot \frac{\eta_p}{1 - \eta_p} \quad [kg \cdot s^{-1}]$$

and it is influenced both the amount of finer fractions in the fuel, and also considerably by the efficiency of the dust precipitator at the end of the boiler.

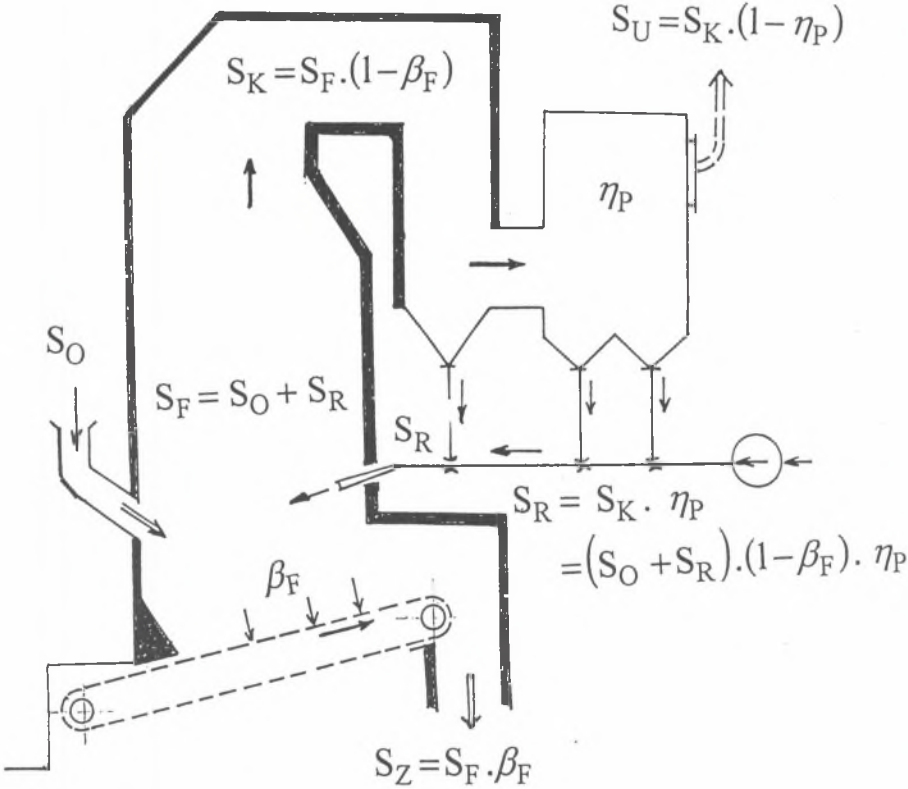

Fig. 11. Bilance of ash and solid particles in IGNIFLUID boiler

Rys. 11. Bilans popiołu i cząstek stałych w kotle IGNIFLUID

In the furnace does not hold the removal that is being returned back to it, i.e. the value of β_F for S_R equals 0, the amount of recirculated particles is:

$$S_R = (1 - \beta_F) \cdot S_0 \cdot \eta_p \quad [kg \cdot s^{-1}]$$

and again, it is dependent on the total efficiency to a considerable extent.

The influence of η_p on the amount of recycled particles was calculated for a boiler with the output of 20 $t \cdot h^{-1}$, in which the efficiency of a solid collector together with the recycled amount, were measured. For the total efficiency of η_p = 84%, about 55 $kg \cdot s^{-1}$ of solid particles circulated in the system. This amount would go up to as high as 450 $kg \cdot s^{-1}$ for the projected increase in efficiency to over 95%. For a still higher increase in the efficiency to the required 98% (in order to maintain the emission limits for solid particles), the recycled amount would increase by more than 600%, compared with the amount corresponding with of 94%. (Fig. 12.)

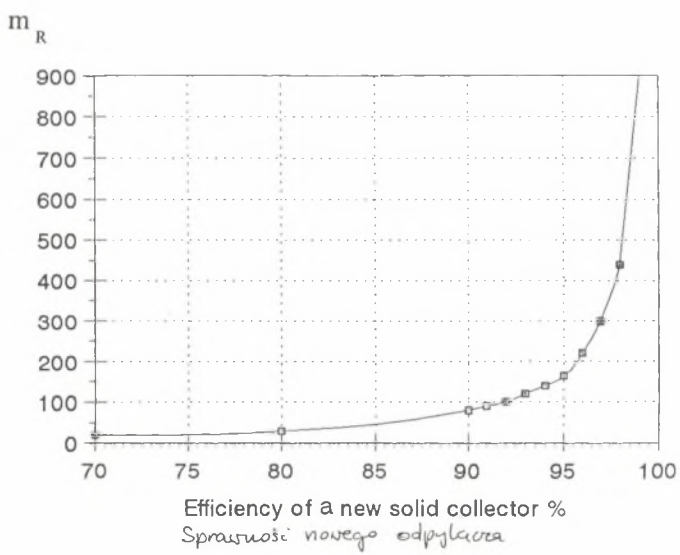

Fig. 12. Amount of recycled solids m_R [kg/h] as the collector efficiency is changed

Rys. 12. Udział cząstek stałych m_R [kg/h] w funkcji zmian sprawności odpylacza

The influence of increased efficiency on the amount of recirculated removal was verified in a unit with the output of 110 th^{-1}. The measuring of the recirculation for three output levels in the boiler revealed that – with an average content of 40% of unburned carbon – the amount of recycled particles

is close to, and for the maximum output, it reaches the amount of fuel brought in. (Curve 1 in Fig. 13).

This remarkable increase was achieved after replacing the original mechanical precipitator of low η_p with elektrostatic one which has the total efficiency of more than 98%. Such a high amount of removal overloads the new precipitators and lowers their efficiency; light–ashes clog the tubes for recirculation and lower the operational period of the boiler.

If the recycled removal leaves the furnace with the slag immediately, the measured mass flow of particles being carried away is substantially lower, and amounts to roughly 20% of the original amount. When the returning removal is blown to the furnace in an unsuitable way to the rear part of the boiler, the coarser particles are entrapped on the surface of the fuel burning low, and in the plastic slag, and their burn–up is not possible any more. This is how the content of combustible matter in the slag might get increased, its value is then somewhere around 30%. From the point of view of efficiency, the loss due to incomplete burning is on the same level as the one due to flue gases loss.

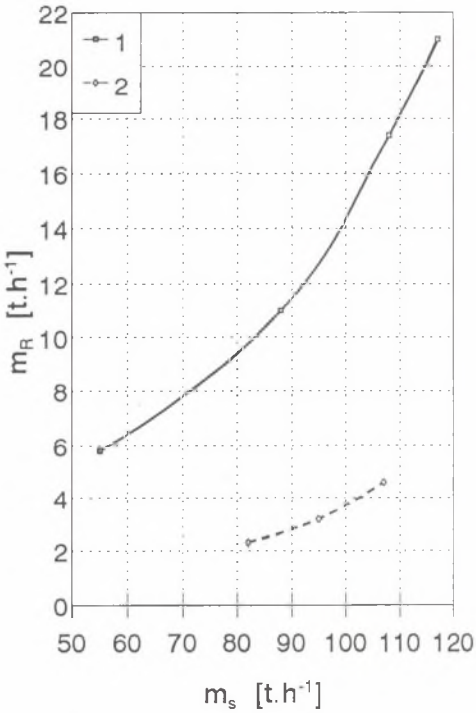

Fig. 13. Amount of recycled solids (m_R) in IGNIFLUID boiler by increasing steam output 55 to 116 t · h^{-1}, Curve 1 – Amount with recirculation 2 – Without recirculation, i.e. amount of particles carried out from furnace

Rys. 13. Udział nawracanych cząstek (m_R) w kotle IGNIFLUID w funkcji obciążenia: 1 – z recyrkulacją, 2 – bez recyrkulacji, tzn. udział cząstek wynoszonych z paleniska

REFERENCES

[1] Noskievic P.: Emise plynných škodlivin při spalování černých uhlí. Symposium Internat. Flame Res. Fountation, Prague 1993.

[2] Fibinger V.: Die Verminderung der Reststoffemissionen und Verlängerung der Betriebsperiode von Dampferzeugern IGNIFLUID. Zeszyty Naukowe Politechniki Śląskiej, ENERGETYKA z. 110, 1990.
[3] Ochodek T.: Optimalizace provozu roštových kotlů se zřetelem na dodrženi emisních limitů. Symposium Internat. Flame Res. Fountation, Prague 1993.

Recenzent: Dr hab. inż. Marek PRONOBIS

Wpłynęło do Redakcji 6.08. 1994 r.

Streszczenie

Niektóre czeskie węgle kamienne o niskiej zawartości siarki mogą być w przyszłości pożądanym paliwem. Technologia ich spalania w paleniskach fluidyzacyjnych jest więc intensywnie badana. Zalety tej technologii w warunkach czeskich spowodowały rozpoczęcie programu budowy dwu typów takich kotłów, z których pierwszy posiada złoże fluidalne składające się głównie z cząstek inertnych, zaś w złożu zanurzone są rury wymieniające ciepło, natomiast drugi ma złoże składające się z płonących cząstek węgla przy podstechiometrycznym udziale powietrza, w związku z czym przeważa zgazowanie. Spalanie kontynuuje się w powietrzu wtórnym ponad złożem.

W Republice Czeskiej używany jest głównie drugi z tych rodzajów, mianowicie IGNIFLUID. Budowane są kotły parowe o wydajności od 50 do 100 t/h i wodne o mocy 80 MW. Kotły zaprojektowano dla węgla kamiennego o granulacji do 20 mm i wartości opałowej 17,5 MJ/kg. Większa część paliwa jest spalana w warstwie fluidyzacyjnej powyżej początkowej strefy pochyłego rusztu. Duże niesfluidyzowane ziarna węgla dopalają się na pozostałym odcinku rusztu. Główną zaletą tego paleniska jest połączenie pozytywnych własności paleniska fluidyzacyjnego i rusztowego. Praca poświęcona jest zagadnieniom związanym z opanowaniem problemów będących skutkiem zarówno konstrukcji paleniska, jak i rodzaju paliwa. Uzyskano zwiększenie sprawności kotła oraz obniżenie emisji stałych substancji szkodliwych poniżej poziomu norm.