ZESZYTY NAUKOWE POLITECHNIKI ŚLĄSKIEJ 1994

Seria: MECHANIKA z.115 Nr kol. 1230

John Anthony POWELL
School of Mechanical and Offshore Engineering
The Robert Gordon University

BADANIA EKSPERYMENTALNE CIECZY ELEKTROREOLOGICZNEJ

Streszczenie. W pracy omówiono własności cieczy elektroreologicznej, stanowisko pomiarowe do wyznaczania jej własności mechnicznych oraz przykładowe wyniki badań doświadczalnych. Zaproponowano oryginalną metodę analizy stanu odkształcenie-naprężenie, którą wykorzystano do opisu dynamiki układów z zastosowaniem tłumików elektroreologicznych.

AN EXPERIMENTAL STUDY OF ELECTRORHEOLOGICAL FLUID

Summary. Mechanical properties of electrorheological fluid, the used experimental rig and the exemplary results are presented. A novel original method of stress-strain analysis was formulated and utilized to examine dynamic responses of simple mechanical systems with electrorheological dampers.

EXPERIMENTELLE PRUFUNGEN EINER ELEKTRORHEOLOGISCHEN FLUSSIGKEIT

Zusammenfassung. In der arbeit hat man die Eigenschaften einer elektrorheologischen Flussigkeit, eine Meßstelle fur die Bestimmung ihrer mechanischen Eigenshaften sowie die Beispiele behandett. Zur Analyse des Zustandes: Formanderung-Spannung wurde eine originelle Methode Vorgeschlagen, welche fur die Darstellung des dynamischen Verhaltens von System unter Anwendung der elektrorheologischen Dampfter geeigent war.

1. INTRODUCTION

By the application of an electric field to an electrorheological fluid an 'apparent' change in viscosity can be achieved. This caused by formation of fibres of semiconducting particles in the fluid. The particles behave as dielectrics and so form chains in the direction of the electric field. When the fluid is sheared additional energy is necessary to break the bonds between particles, as well as overcome the shear forces due to the viscous effect of the fluid [1]. In this paper an experimental investigation is presented which highlights the nature of the mechanism occurring within an activated electrorheological material. The positive application of ER fluids to engineering devices

and systems is enormous. The fluid is very versatile in that it brides the between solids and liquids. By designing a system incorporating ER elements the need for servo-valving could be eliminated. The use of ER fluid in the control of vibration would help exclude the prerequisite for an intermediate mechanical links between link the electronic controller and damping media. Extensive variation of the mechanical properties of the fluid make torque drive couplings and clutch systems more appealing than conventional ones which suffer considerable mechanical wear. Areas of application lie in the field of vibration isolation such as engine mounts [7] and shock absorbers [4]. Drive clutches are also a practical application [3].

The electroviscous effect can be demonstrated using a variety of solid/fluid mixtures. Of the more versatile liquids to be developed, the suspension of polymer particles in silicon oil at present seems to offer the best properties. Several authors have shown the basic characteristics of differing ER fluids [8-11], but Powell [12] has reported a more in depth study recently.

2. SHEAR STRESS-STRAIN RATE PLANE

The purpose of this section is to give the reader an understanding of how the energy storage and dissipation mechanisms appear in he shear stress strain rate planes. The use of these planes aids whe understanding of the experimental data. Another factor which needed to be taken into account was the inertia effect of the fluid and central bob assembly. A typical example of an energy storage element is the linear spring. The force in the spring in proportional to the extension, hence, in the shear stress-stain plane a linear variation in the force was seen, with the slope of the line being the spring stiffness, k. The appearance of the stiffness force in the plane of shear stress-strain rate was then deduced. A mean of transferring the stiffness force onto the ortoghonal plane was required. By viewing the graph of shear stress against stain with the addition of the third axis, strain rate, transference of a function in one plane could be made to another by utilising the phase plane.

Consider the time histories of a sinusoidal strain and its associated strain rate of change of strain rate, figure 1(a) (not drawn to a relative scale). For the first quarter cycle of motion the product of the strain and strain rate are positive therefore in the second lying in the

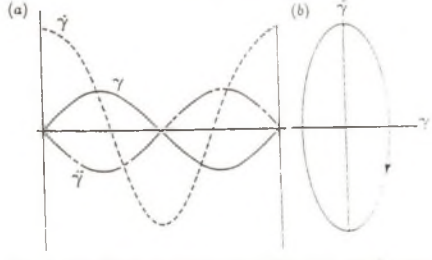

Fig. 1 (a) Time histories of strain (γ), strain rate (γ) and strain acceleration (γ); (b) direction of the trajectory in the phase plane

Rys. 1 (a) Przebiegi czasowe odkształcenia (γ), prędkości odkształcenia (γ) i przyspieszenia odkształcenia (γ), (b) trajektoria na płaszczyźnie fazowej

second quadrant of the phase plane, figure 1(b). For the second quarter cycle of motion the strain rate changes sign and in the third quarter cycle cycle of motion so does the strain. This defines the direction of the trajectory in the phase plane as clockwise. The graph in figure 2(a) contains the plane in which the stiffness force lies, inclined at an angle α to the γ-γ plane. By projecting the path of phase plane onto this inclined plane the trajectory for sinusoidal motion would be elliptical. The shear stress - stain rate plane and the direction of the trajectory of the stiffness can be seen by looking in the direction of the arrow, as shown in figure 2(a). The resulting shear stress- strain diagram can be seen in figure 2(b). The same technique can be applied to viewing energy dissipation mechanisms such as viscous damping in the shear stress-strain rate plane. Figure 3(a) describes the trajectory of viscous damping, the observed plane can be shown to be clockwise in nature as seen in figure 3(b). The trajectory is again elliptic in shape.

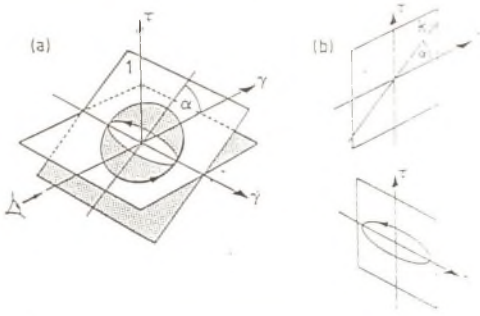

Fig. 2 (a) τ-γ-γ graph showing stiffness plane (1) with projected trajectory; (b) τ-γ and τ-γ planes showing stiffness as an anticlockwise ellipse

Rys. 2 (a) Płaszczyzna sztywności (1) na wykresie w układzie τ-γ-γ wraz ze zrzutowaną trajektorią, (b) sztywność jako lewoskrętna elipsa na płaszczyźnie τ-γ oraz τ-γ

The presence of a tangential acceleration due to an oscillatory motion give rise to large inertial forces at elevated frequencies. An inertial force is 180° out of phase with the strain (or elastic force), the strain acceleration is shown in figure 1(a). The resulting inertial force would appear as a straight line in the shear stress-strain plane, like a stiffness with a negative slope, figure 4(b). By applying the same principles it can be shown qualitatively that an inertial force will be elliptic in nature when viewed in the shear stress-strain rate plane. The trajectory in this plane would be clockwise, opposite in direction to the stiffness plane. By making use of the information presented in this section, the types of forces present in an activated ER fluid

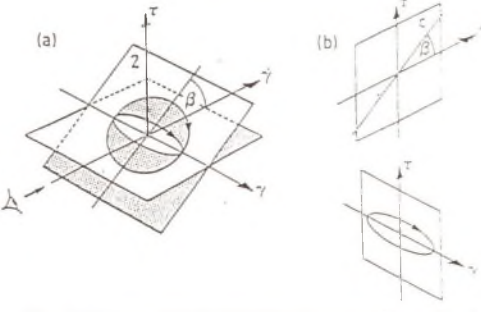

Fig. 3 (a) τ-γ-γ graph showing damping plane (2) with projected trajectory; (b) τ-γ and τ-γ planes showing viscous damping as an clockwise ellipse

Rys. 3 (a) płaszczyzna tłumienia (2) na wykresie w układzie τ-γ-γ wraz ze zrzutowaną trajektorią, (b) tłumienie wiskotyczne jako prawoskrętna elipsa na płaszczyźnie τ-γ oraz τ-γ

are deduced in the experimental results. Consideration of this information also proved invaluable when developing mathematical models.

3. EXPERIMENTAL RESULTS

The experimental set-up was designed with the objective of classifying the physical properties of the electrorheological fluid. From the available literature [1] it was apparent that the fluid when electrified exhibited simultaneously two main properties, that of a dissipator of energy and a storer of energy. The mechanisms occurring physically within the fluid would be some functions of strain and stress rate. Therefore it was decided to view the response of the fluid in graphs of shear stress versus strain and shear stress versus strain rate. From these graphs the characteristic behaviour of the fluid could most likely be deduced. Also, the time histories of these parameters could be viewed for additional information.

The results in this section show the response of the ER fluid to an oscillatory strain, for different frequencies and strain amplitudes. These are presented as time histories of strain, strain rate and shear stress. Also shown are the shear stress-strain rate and shear stress-strain diagrams. A sample of the types of responses obtained are given.

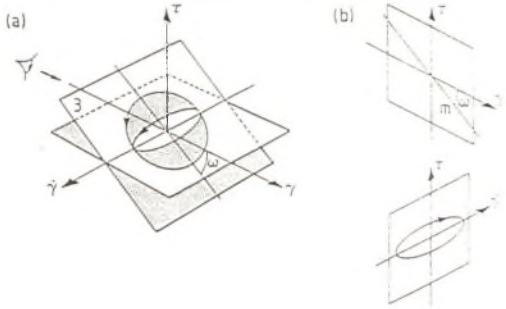

Fig. 4 (a) τ-γ-γ graph showing inertia plane (3) with projected trajectory; (b) τ-γ and τ-γ planes showing inertial force as an clockwise ellipse

Rys. 4 Płaszczyzna bezwładności (3) na wykresie w układzie τ-γ-γ wraz ze zrzutowaną trajektorią, (b) siła bezwładności jako prawoskrętna elipsa na płaszczyźnie τ-γ oraz τ-γ

0 kv/mm field strength case

Under zero electric field conditions the ER fluid was subjected to an oscillatory strain at several frequencies. In figure 5(a) the shear stress-strain rate diagram shows direct proportionality between the ordinate and abscissa, this is the requirement for Newtonian flow. The strain for this test was 1.7452 peak to peak at a frequency of 4 Hz. Under zero electric field the ER fluid behaved in a Newtonian manner for all strain amplitudes and frequencies. In the shear stress-strain diagram an ellipse can be seen which had a clockwise trajectory. this was due to viscous shear force being 90° out of phase with the strain.

1.33 kv/mm field strength case

The highest field strength used in this set of experiments was 1.33 kv/mm. Figure 5(b) shows the response for a strain of 3.4904 at a frequency of 10 Hz. The shear stress-strain rate diagram shows that the yield stress was of the same magnitude, but the maximum value was reached gradually. The maximum value of stress attained during the portion of the cycle where elastic behaviour occurred was seen to decrease by approximately by one third. This was in agreement with the reduction in the areas of the loops at maximum and minimum strain rates, shown in figure 5(b). Several authors have noted

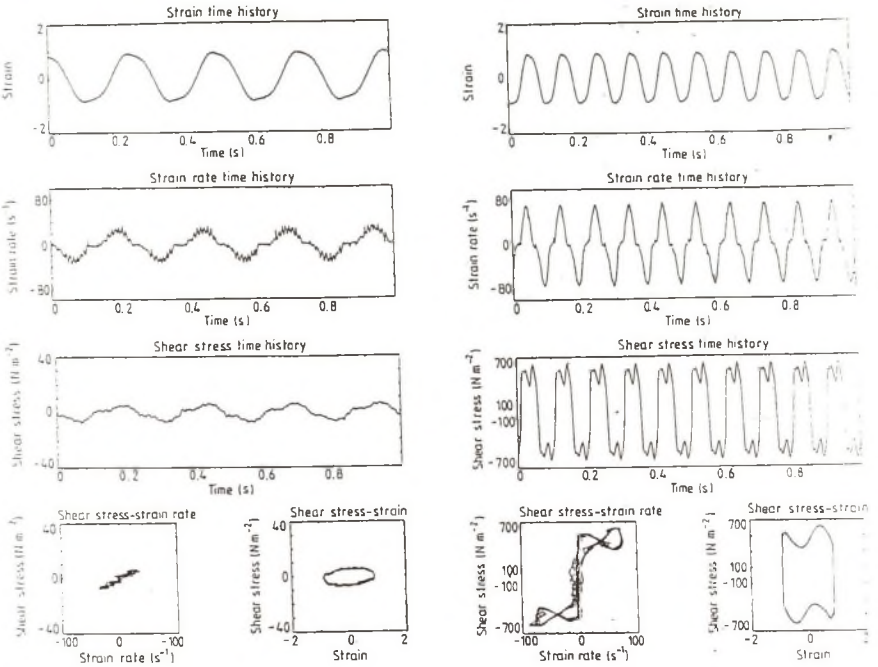

Fig. 5 Time histories for (a) frequency = 4 Hz and electric field strenght = 0 kv/mm; (b) frequency = 10 Hz and electric field = 1.33 kv/mm

Rys. 5 Przebiegi czasowe (a) dla częstotliwości 4 Hz i natężenia pola elektrycznego 0 kV; (b) dla częstotliwości 10 Hz i natężenia pola elektrycznego 1.33 kV/mm

the field strength squared dependency of the yield stress [1]. The experimental parameters τ for a strain of 5.3260, where plotted against the electric field squared, shown in figure 6. A direct proportionality between the yield stress and the square of the square of the electric field can be noted. This is in keeping with others authors results.

4. CONCLUSIONS

The experimentation undertaken on the behaviour of the activated electrorheological fluid gave consistent evidence of the formation of a structural skeleton within the ER material. From consideration of the electroviscometer experimental results, one can come to the following conclusions on ER material behaviour:

(1) The sustainable yield stress in the activated ER material increased monotonically with applied electric field strength. The yield stress was shown to vary linearly as a function of the electric field strength squared. The existence of a yield stress within the ER material pointed strongly toward the presence of some kind of formed structure. For larger amplitudes (strains) across the ER material the magnitude of the yield stress decreased somewhat, indicating the disruption of the formed structure.

(2) The level of hydrodynamic (viscous) type forces in the activated ER material increased with increasing electric field, above a certain value of amplitude. Below a certain amplitude threshold the ER material behaved as an elastic solid with no apparent viscous forces participating. as the amplitude increased the material changed from a Binham plastic (with a sustainable yield stress) to wholly viscous system. This leads one to conclude that the larger amplitude motion caused increased hydrodynamic flow within the structure, which then contributed to the disruption of the structure itself.

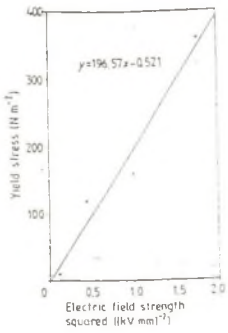

Fig 6 Yield stress versus field strength squared

Rys. 6 Granica plastyczności w funkcji pierwiastka natężenia pola

(3) An elastic force was seen on application of an electric field. The elastic force was greater for lower amplitudes and in general was far more distinct when the viscous forces were less noticeable. The elasticity was nonlinear in nature, the equivalent linear stiffness decreasing with increasing amplitude.

REFERENCES

[1] Block H., Kelly J.P. Elecro-rheology. J. Phys. D. Appl. Phys. 21, 1988, 1661-1676.

[2] Winslow W.M. Method and means for translating electrical impulses into mechanical force. US patent specification No. 2417850, 1947.

[3] Stevens R., Sproston J.L., Stanway R. An experimental study of electrorheological torque transmission. ASME Journal of Meechanisms, Transmissions and Automation in Design 110, 1988, 182-188.

[4] Stanway R., Sproston J.L., Wu X. Variable suspention damping using electrorheological fluids. Proc of the IMechE C382/034, 1989, 547-558.
[5] Duclos T.G. Design of devices using electrorheological fluids. SAE Technical paper No. 881134, 1988.
[6] Duclos T.G. An externally tunable hydraulic mount which uses electrorheological fluid. SAE Technical paper No. 870963, 1988.
[7] Peterek N.K., Goudie R.J., Boyle F.P. Actively controlled damping in fluid filled engine mounts. Proc. Second Int. Sym. on Electrorhelogical Fluids, 1989, 409-418.
[8] Duff A.W. The viscosity of polarised dielectrics. Physical Review 4(1), 1986, 23-38.
[9] Hill J.C., Van Steenkiste T.H. Response times of electrorheological fluids. Journal of Applied Physics 70(3), 1991, 1207-1211.
[10] Smith K.L., Fuller G.G. Response of ER materials. Proc. First Int. Sym. on Electrorhelogical Fluids, 1989, 102.
[11] Shullman Z.P., Korobko E.V., Yanowskii Y.G. The mechanism of the viscoelastic behaviour of electrorheological suspentions. J.Non-Newtonian Fluid Mechanics 33, 1989, 181-196.
[12] Powell J.A. The mechanical properties of an electrorheological fluid under oscillatory dynamic loading. Smart Materials and Structers, 1993 (in press).
[13] Powell J.A., Wiercigroch M. Influence of non-reversible Coulomb characteristics on the response of a harmonically excited linear oscillator. Machine Vibration 1, 1992, 94-104.

Recenzent: Prof. dr hab. inż. Wojciech Cholewa
Wpłynęło do redakcji w grudniu 1993r.

Streszczenie

Zastosowanie zmiennego cieczy elektroreologicznej (ER) umożliwia wygodne sterowanie współczynnikiem lepkości poprzez zmianę pola elektrycznego, w którym ta ciecz się znajduje. Pozwala to na bardzo prostą zmianę współczynnika tłumienia w układzie dynamicznym. Fakt ten wskazuje na bardzo szerokie potencjalne możliwości zastosowania cieczy ER w wielu dziedzinach.

Mechanizmem, który umożliwia zmianę współczynnika lepkości w taki właśnie sposób jest formowanie się "włókien" półprzewodnika zgodnie z orientacją pola magnetycznego. W przypadku ruchu warstewek cieczy w kierunku nierównoległym do linii pola potrzebna jest dodatkowa energia w celu "złamania" powstałych włókien [1].

Efekt zmiennych własności reologicznych może być uzyskany dla wielu mieszanin różnych olejów i proszków, jednakże jedne z najlepszych własności otrzymuje się dla zawiesiny polimeru w oleju silikonowym [8-12].

Jednym z celów prezentowanej pracy jest przedstawienie przejrzystej interpretacji kumulowania i rozpraszania energii w układzie dynamicznym z wykorzystaniem płaszczyzny odkształcenie - prędkość odkształcenia, co posłużyło później do interpretacji uzyskanych eksperymentalnie charakterystyk.

Stanowisko badawcze zostało zaprojektowane w celu wyznaczenia fizycznych własności cieczy elektroreologicznej. Na podstawie literatury ustalono, że ciecz ER to nie tylko rozpraszacz, lecz i akumlator energii, co ma ważne znaczenie w przypadku "drganiowych" zastosowań.

Zaprezentowano wyniki porównawcze dla pola elekrycznego równego zero i 1.33 kV/mm, ukazując zmianę własności mechanicznych wraz ze wzrostem pola elekrycznego.