ZESZYTY NAUKOWE POLITECHNIKI ŚLĄSKIEJ 1990

Seria: INŻYNIERIA ŚRODOWISKA z. 31 Nr kol. 968

Marian B. NANTKA

SIMPLIFIED METHODS FOR CALCULATING AIR FLOWS AND HEAT LOSSES IN DWELLING HOUSES

Summary. The konwledge of the air exchange in dwelling houses is important not only in the estimation of ventilation systems, but also in the determination of ventilation heat losses. The paper presents some results of theroetical methods of air and heat flows in typical dwelling houses.

In many countries research workers provided some analysis of buildings for the estimation of air infiltration and ventilation and also heat demands. A experimental and theoretical study of these processes has also been undertaken by the scientists of the Silesian Technical University of Poland. The paper presents some of the results of this study.

Introduction

Energy for heating and ventilating buildings constitutes a significant proportion of the total energy consumption. The heat losses as the sum of conductive and ventilative heat flows are about 75-85% of building energy balance [1, 2]. These energy balances show how large a portion of the total outward energy flows is due to ventilation. The fraction of the ventilation heat losses in existing buildings with the natural ventilation (NV) varies between 20-25% for single-family houses (SH) and even 50% mutli-family buildings (MH). In high blocks with the exhaust-mechanical ventilation (EMV) this fraction is always higher than +50% [2, 3].

In according to the rules of the Polish Norm from 1982, i.e. PN-82/B-02020, the heat state of buildings may be characterised by the average thermal transmittance of gross enclosure area. These k_m - values must be calculated from the k- values of the various external walls, and their areas. In general, this Norm allows to motivate the thermal insulation of external walls and determine the optimal shapes of buildings.

In contrast with the knowledge on thermal transmission the subject of ventilation and airtightness were known far less before 1980 [1, 3]. From the viewpoint of energy conservation air infiltration and ventilation have to be minimized. Certain amount of fresh air, however, has to be supplied to a building in order to maintain healthy, safe and comfortable conditions for the occupants [3, 4]. Fresh air requirements have

varied between 20 m^3/h per person and 120-150 m^3/h per the one flat while cooking and bathroom occupancy. For these cases, the air change rate varies between 0,5/h (i.e. the minimum ventilation rate) and higher than 2,0/h [1, 3, 5, 6]. These quantities of air usually supplied through the leakage in the building structure because the majority of houses are ventilated by the natural or exhaust mechanical ventilation.

The paper presents some results of theoretical studies of air and heat flow in buildings characteristic for Polish building industry. On the basis of analysis of a large number of measurements on different buildings that the simple "limitation of tightening" method can be elaborated. This method and the charakteristic results of analysis are presented below.

Findings

The study of heat consumption has been undertaken by the author since 1980. The relation between energy consumption and the indoor environment was defined by measurements in existing dwelling houses and by the heat flow simulation. Description of the method used and the particular results has already in bibliography [1, 2, 3, 4, 5, 6, 7, 8, 9]. These results prove that the conditions in houses are accidental and, simultaneously, the heat consumption is excessively. In general, results of these experimental works provide the material for determination of the heat state of the building as a whole. All buildings may be divided by the gross area of the enclosure (A_z) to the building's volume (V). For estimation and comparison of different buildings, the percentage of each external wall area (A_i/A_z) can be defined.

The total heat demand cam be characterised by the average thermal transmittance of gross enclosure area (k_m) and by the total ventilation rate. This air change rate is the result both of the natural forces as buoyancy and wind effect and power of ventilation system to apply. Therefore, for characterisation of the building as a whole, the average air flow coefficient of gross enclosure area (a_m) and air change rate (as function the type of ventilation system) must be defined. In this case, the heat demanded for buildings can be expressed by the function

$$\dot{Q} = f(k_m, a_m, n_v)\Big|_{\text{for } C_1, C_2} \tag{1}$$

where C_1 and C_2 are reference conditions. These conditions consist for both of the description of geometrical and constructional properties of bildings (i.e. dimensions, shapes, etc.) and the type of forces acting on building envelope (i.e. stack and wind effect, power of ventilation, etc.). The total heat demanded is derived from function (1) and results of measurements in existing buildings can be given by

$$\dot{Q}(T) = \dot{Q}(CHF) + \dot{Q}(NAF) + \dot{Q}(MV) + \dot{Q}(A) \tag{2}$$

where

$\dot{Q}(T)$ - total heat demanded,

$\dot{Q}(CHF)$ - conductive heat losses,

$\dot{Q}(NAF)$ - heat losses connected only with the natural air flows (NAF) from outside to inside,

$\dot{Q}(MV)$ - heat demands as a results of the mechanical ventilation (MV),

$\dot{Q}(A)$ - additional heat losses as a results of underpressure action of gravitational ducts.

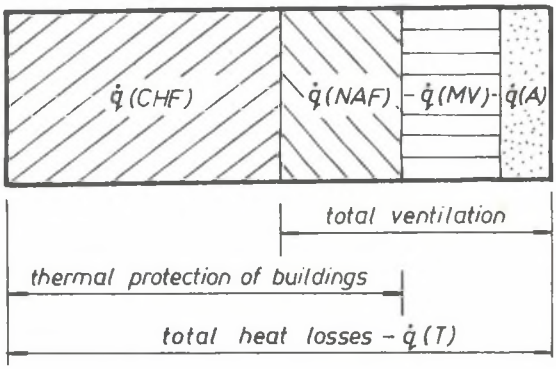

Fig. 1. Structure of division of heat losses in buildings as a whole
Rys. 1. Podział strat ciepła (schemat)

In equation (2) is illustrated schematically on fig. 1. The first and second terms of this equation are decisive for the thermal protection of buildings. Simultaneously, the second, third and fourth terms are connected with the heat demands due to natural and mechanical ventilation.

The term on the right side of equation (2) can be gien by

$$\dot{q}(CHF) = k_m A_z \qquad \dot{q}(MV) = n_v V c\rho$$
$$\dot{q}(NAF) = \sum \dot{V}_{in} c\rho \qquad \dot{q}(A) = n(A) V c\rho \tag{3}$$

where $\dot{q}$ - values are heat losses per unital temperature differences (i.e. external/internal), $\sum \dot{V}_{in}$ is the total air infiltration without ventilation action, n_v is the air change rate as function power of ventilation system which must equal the minimum ventilation rate, $n(A)$ is the additional air leakage rate as result of the underpressure connected with the gravitational-ventilation ducts, and $c\rho$ is the specific capacity of air (in winter season is equal about 0,36 Wh/m^3K).

For the analyses of these dependences (3) beside the large number of measurements in existing buildings also the theoretical methods were elaborated. In this paper only the method for determination of total air infiltration will be presented below.

Proposed method for the calculation of air infiltration

The purpose of the method is to provide a model for relating infiltration rate at any given combination of wind velocity, direction and difference between internal and external temperatures to the leakage characteristic for a building, derived from pressurization tests in houses [2, 4, 6, 9].

The building envelope is represented by a rectangular prism of height, H (see fig. 2). Under steady-state condition the rate of supply of outside

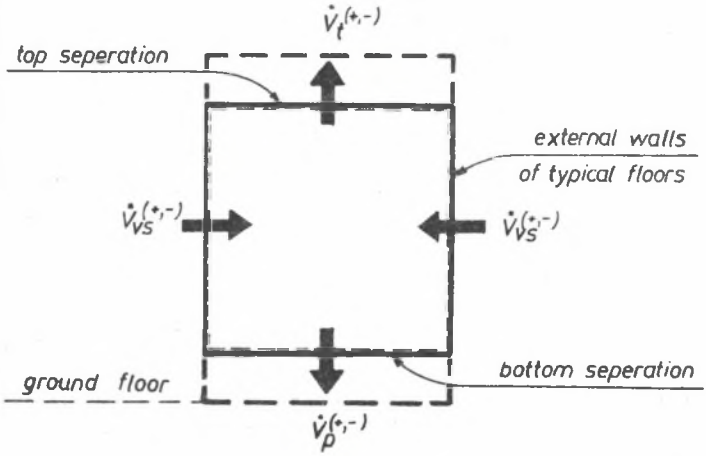

Fig. 2. Flow balance under wall leakage calculations
Rys. 2. Bilans przepływów powietrza przez budynek

air equals the sum of the air leakage rates through the exterior walls of typical floors (vs), bottom (p) and top (t) separation. It can be expressed as follows

$$\sum \dot{V}_{in} = a_{vs} \sum_{j=1}^{m} \{A_{vs}(\Delta p_{vs})^{\alpha}\} + a_p A_p (\Delta p_p)^{\alpha} + a_t A_t (\Delta p_t)^{\alpha} \tag{4}$$

where a is the flow coefficient, Δp is the pressure difference, A is the area, m is the total number of floors with typical wall construction, and α is the flow exponent (usually near 0,7).

On the other hand, the total air infiltration through the building envelope may be expressed by the basic relationship between the leakage of part of building and the pressure difference. For the building as a whole this relationship can be given by equation

$$\sum \dot{V}_{in} = a_m A_z (\Delta p_m)^{\alpha} \tag{5}$$

In the equation (5), Δp_m is the mean pressure difference which is characteristic for buildings envelope, a_m is the average air flow coefficient for this envelope (in m^3/m^2h at 1 daPa), and A_z is the total area of all exterior walls (i.e. $A_z = A_{vs} + A_p + A_t$).
Mean pressure difference may be calculated as weighted mean from average pressures on the all walls and their percentage of the total area of buildings envelope, e.g.

$$\Delta p_m = \sum_{i=1} \Delta \bar{p}_i (A_i/A_z) \tag{6}$$

where $\Delta \bar{p}_i$ is the average pressure difference on the i-th wall.
Refering to the diagram shown on fig. 3 these average pressure differences for vertical and horizontal surfaces are considered seperately:

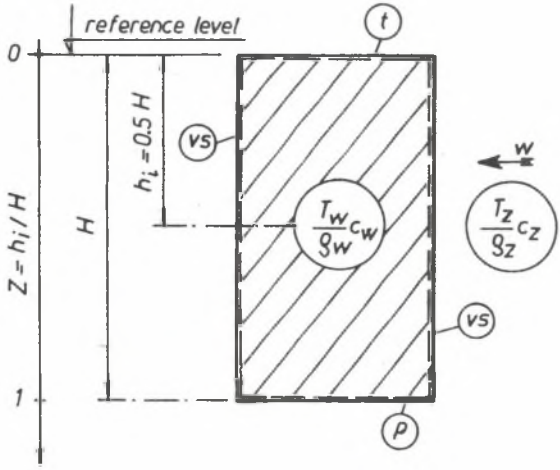

Fig. 3. Schematic diagram for flow through external surfaces of bildings
Rys. 3. Schemat dla obliczeń przepływów powietrza przez zewnętrzne przegrody budynków

(I) Vertical surfaces

The pressure difference across the exterior wall is given by the flolowing equation

$$\Delta\overline{p}_{vs} = (0{,}5\ \rho_z w^2 c_z + p_o - \rho_z\ g\ h) - (p_w - \rho_w\ g\ h) \tag{7}$$

where $\overline{p}_w$ is the static pressure at h = 0 within the building, p_o is the reference static pressure at h = 0 in the free wind, w is the wind velocity, ρ_z and ρ_w are densities of external and internal air and g is the acceleration of gravity (9,8 m/s^2).

For convenience p_w may be expressed by

$$\overline{p}_w = 0{,}5\ \rho_z w^2 + p_o \tag{8}$$

and finally

$$\Delta\overline{p}_{vs} = 0{,}5\ \rho_z w^2 (\beta + \gamma Z) \tag{9}$$

where

$$\beta = c_z - c_w$$

$$\gamma = \frac{(\rho_z - \rho_w)gh}{0{,}5\ \rho_z w^2} = 2\ Ar$$

$$Z = h/H$$

In equations (7) (9) - c_z is the shielding coefficient and c_w is called the internal shielding coefficient. The term shielding coefficient is equivalent to the more standard term of exterior pressure coefficient; the only difference lies in the interpretation. This coefficient (c_z) is used as the ratio of the average exterior wind pressure to the stagnation pressure at the ceiling height (i.e. for h = 0 on fig. 2). Similar to the stack effect, the wind effect causes an internal pressure shift. As long as the ahielding coefficients themselves are not functions of wind velocity, the internal pressure shift will be proportional both to the stagnation pressure and the internal shielding coeffiecient (see the equation 8). This coefficient is function of wind direction and varies between "-0.15" and "-0.30" (fig. 4). For a typical shaped structure, the internal shielding coefficient (c_w) is about "-0,21" [10, 11, 12].

Finally, the average pressure difference for vertical surfaces may be calculated from equation (9) and for Z = 0,5 (i.e. h = 0,5 H)

$$\Delta\bar{p}_{vs_j} = 0{,}5\ \rho_z w^2(\beta_j + 0{,}5\ \gamma_j) \tag{10}$$

where

j - is the number of vertical surfaces.

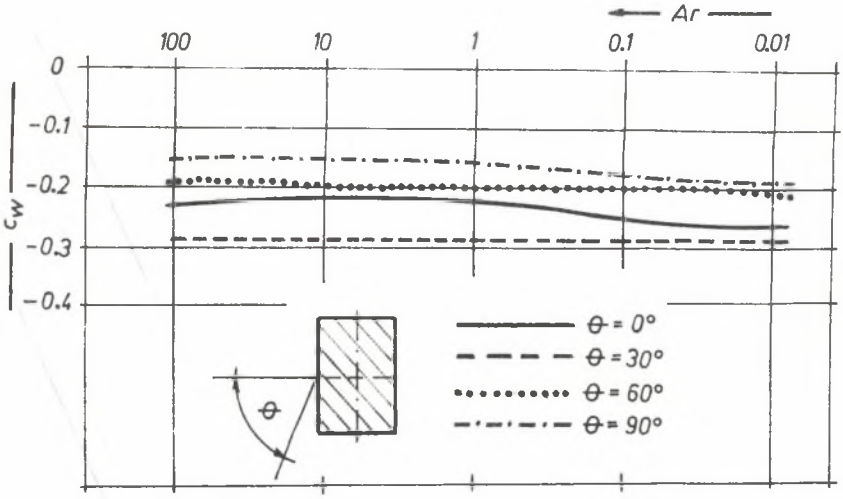

Fig. 4. The internal pressure coefficient, c_w, versus the Archimedes number, Ar, for different wind direction, Θ. The range of Ar corresponds to a range of wind velocity 0,5-10 m/s and an interval of the indoor-outdoor temperature difference 5-40 K

Rys. 4. Zależność współczynników, c_w, odniesionych do wewnętrznych warunków w budynkach, w funkcji liczby Archimedesa, Ar, dla różnych kierunków napływu wiatru, Θ. Zakres zmian Ar odpowiada zmianom prędkości wiatru 0,5-10 m/s oraz różnic temperatur powietrza wewnętrznego i zewnętrznego 5-40 K

(II) Horizontal surfaces (the top and bottom separations)

There are two horizontal areas, at Z = 0 and Z = 1, specified in the following equations by the sufficies `t` and `p`, respectively.

The average prressure difference across the top seperation is calculated for Z = 0,

$$\Delta\bar{p}_t = 0{,}5\ \rho_z w^2 \beta_t \tag{11}$$

where $\beta_t = c_t - c_w$

The average pressure difference across the bottom separation is given by the equation (9) and Z = 1,

$$\Delta\bar{p}_p = 0{,}5\ \rho_z w^2(\beta_p + \gamma_p) \tag{12}$$

where $\beta_p = c_p - c_w$

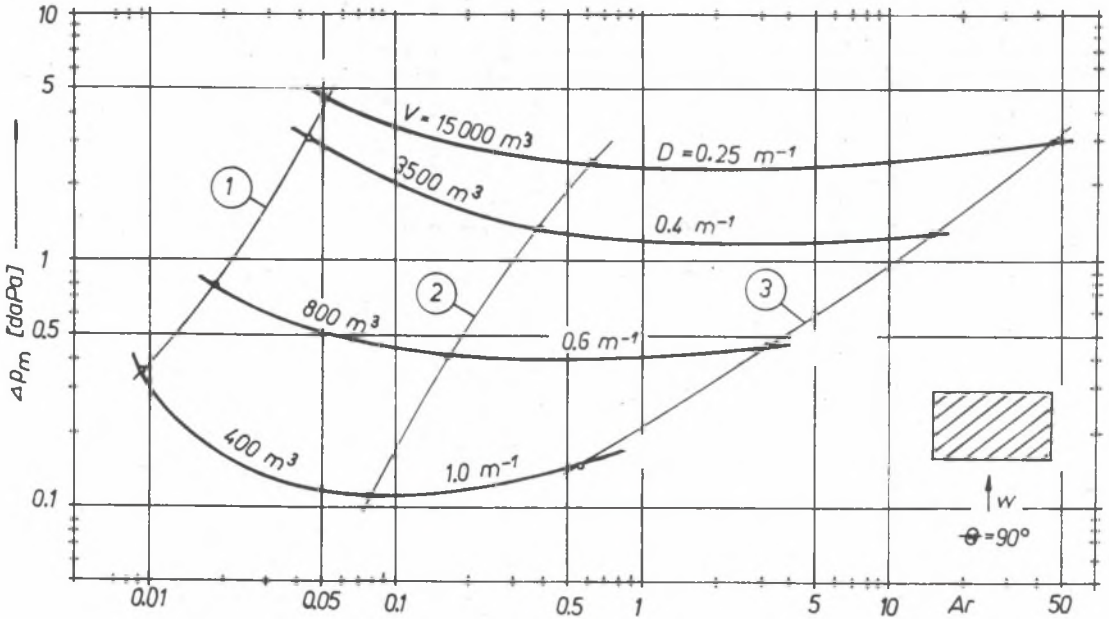

Fig. 5. The average pressure difference, Δp_m, for selected buildings

1 - t_e = +10°C, w = 10 m/s
2 - t_e = 0°C, w = 5 m/s t_i = +20°C
3 - t_e = -20°C, w = 1 m/s

Rys. 5. Srednie różnice ciśnień, Δp_m, dla wybranych budynków

1 - t_e = +10°C, w = 10 m/s
2 - t_e = 0°C, w = 5 m/s t_i = +20°C
3 - t_e = -20°C, w = 1 m/s

Some results of calculation of the average pressure differences are illustrated on fig. 5. These pressure differences are results of the natural driving in the free-standing buildings. As shown, the most characteristic for winter season may be made for external temperature equal about $0^{o}C$ and wind velocity - 5 m/s.

When the mean pressure difference is known, the average air flow coefficients can be determined by comparison equations (4) and (5). This a_m - value is given by

$$a_m = \sum_i ai(A_i/A_z)(\Delta\bar{p}_i/\Delta p_m)^{\alpha} \tag{13}$$

In this equation both the a_m - and a_i - values are determinated by air leakages per `m sq.` of the total wall area. These values may be defined also per `m` of the total lenghth of gaps in windows. It is possible by equation

$$a_o = a_m(\varphi_o \eta_o s_o)^{-1} \tag{14}$$

where a_o is the air flow coefficient in m^3/mh at 1 daPa, a_m is the air flow coefficient in m^3/m^2h at 1 daPa, φ_o is the fraction of windows area to the building's envelope, i.e. $\varphi_o = A_o/A_z$, η_o is the ratio of air leakage through windows to the total air infiltration, and s_o is the ratio of the total lenghth of gaps in a typical window to the window area in 1/m.

For typical windows in dwelling houses the ratio s_o is in average 3,5/m, the ratio η_o varies between 50% and 60% in existing buildings [2, 6]. For future houses, the ratio η_o must be about 90-95% (tight buildings).

For the above-mentioned data the a_o - values can be expressed as follows

- For the real state of buildings

$$a_o = 0{,}5 \quad a_m(\varphi_o)^{-1} \tag{15a}$$

- For future (tight) buildings

$$a_o = 0{,}3 \; a_m(\varphi_o)^{-1} \tag{15b}$$

In average, the φ_o - values is ewual about 0,20-0,25. In this case, the a_o - values varies between 1,2 m^3/mh at 1 daPa (in tight structure) and higher than 4,0 m^3/mh (MH) and is equal about 1,5-2,0 m^3/mh at 1 daPa (SH) in the existing dwelling houses [8, 9, 13, 14, 15].

Using the method described, air infiltration rates for a simplified model of dwelling houses as a whole were calculated at various combination of wind and external air temperature. Results of these calculations

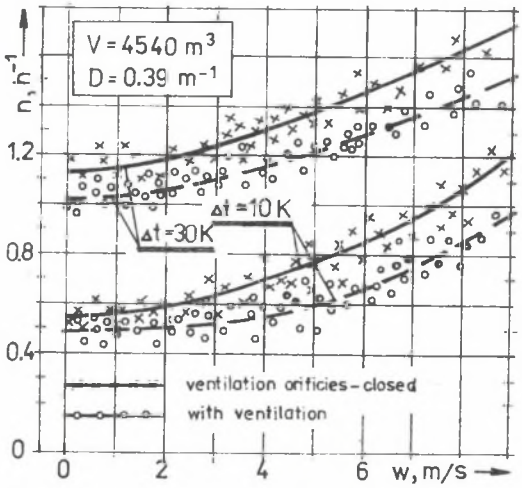

Fig. 6. Comparing calculated and measured ventilation rate (principal results)

Rys. 6. Porównanie obliczonych i pomierzonych wymian powietrza w istniejących budynkach

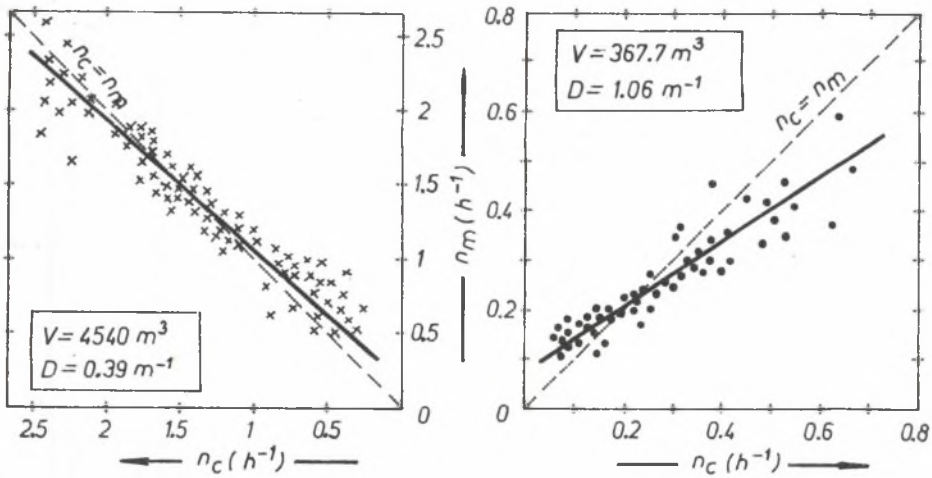

Fig. 7. Calculated ventilation, `$n_c$`, versus measured ones `$n_m$`

Rys. 7. Zależność obliczeniowych, n_c, i pomiarowych, n_m, wartości wymiany powietrza w badanych budynkach

are compared with a measured value (see fig. 6). Calculated rates `$n_c$` and the measured ones `$n_m$` can be seen on fig. 7. With the technique of linear regression the following analytical expression was obtained

- For the single-family house (A_z = 390 m^2, V = 368 m^3)

$$n_m = 0{,}083 + 0{,}64\ n_c \tag{16a}$$

- For the multi-family building (A_z = 1770 m^2, V = 4540 m^3)

$$n_m = 0{,}192 + 0{,}89\ n_c \tag{16b}$$

where n is the ratio of the total air infiltration to the building's volume, i.e. $n = \sum \dot{V}_{in}/V$.

The agreement between the theoretical model and the data from measurements in twenty existing buildings without ventilation (exhaust orifices closed) [1, 4, 14, 15] gives confidence that the simple method may provide as means of estimating house infiltration rate using leakage data obtained from whole building pressurization tests, i.e. the a_o - or, a_m - values.

For realisation of the theoretical method, the parameters used in the model are:

(1) The leakage area (s) of the structure. The leakaga area is the parameter that describes the tightness of the structure (obtained by pressurization tests). Simultaneously, the geometrical properties of buildings, i.e. dimensions, shapes, the percentage of external walls (vertical and horizontal) of gross enclosure area, etc. must be defined.

(2) The inside-outside temperature difference (T) and the wind velocity (w). These conditions allows on the calculation of the Archimedes number - Ar. This relates buoyancy and intertial forces and in this context is defined as

$$Ar = \frac{T\ g\ h}{T_w\ w^2} \tag{17}$$

where T_w is the absolute temperature of the air within the house (usually near 293 K).

(3) The terrain class of the structure. These data refer to the density of other buildings and obstructions which influence on wind velocities near the structure.

One from the important factors for calculations are the shielding pressure coefficients (for all external surfaces, i.e. c_z - c_{vs}, c_t, c_p) and also the internal shielding coeffiecnt, i.e. c_w. In most cases, these coefficients will not be known; therefore we propose to use wind tunnel data for a typical shaped structure. Such a study was done by many authors, for example - R.E.Akins, J.A.Peterka, J.E.Cermak, B.E. Lee, etc.[16,17, 18].

The exponent of the leakage function has an important bearing on the calculation of air infiltration. This exponent is set to a constant value for all pressure differences anfor for leakage path, i.e. α - is equal 0,7, but the α- value may be altered from 0,5 to 1,0. In practice, this exponent varies between 0,6 and 0,8 [1, 4, 6, 12].

Results and discussion

For correct realisation of discussed problems from both a ventilation point of view and from an energy point of view, the determination air change rate connected only with the type of ventilation system necessary to apply. These indications are results of earlier author's work [2, 8, 14] concerning thermal and ventilation requirements. On the basis of these works the type of ventilation system in different building can be determined. In this case, buildings are divided according to the vaule of D, the ratio of gross enclosure area to total volume, i.e. $D = A_z/V$.

- Natural ventilation (NV). These systems are recommended if the ratio D is higher than 0,6/m. The typical percentage of windows area (when this area is according to the minimum day lighting for dwellings) is about 10-15%.
- Exhaust-mechanical ventilation (EMV). These systems are recommended if the ratio varies between 0,4/m and 0,6/m. The characteristic windows area of building's envelope is about 20%.
- Supply-exhaust mechanical ventilation (SEMV). These systems are recommended for high-rise blocks, i.e. if the ratio D is lower than 0,4/m. The typical windows area φ_o is about 35% or 45%.
  - (a) If the ratio D is higher than 0,20/m can be installed supply-exhaust mechanical systems without waste heat recovery.
  - (b) For high and tall buildings, i.e. if the ratio D is lower than 0,20/m (or about 0,25/m), the supply-exhaust mechanical ventilation with waste heat recovery (SEMV + WHR).

The regulation of the mechanical systems has to be made adjustable to different intensities of usage at different hour of the day (or the year). Thus, for example a higher ventilation rate during cooking time in the kitchen has to be provided. During times of absence, however, only minimum ventilation will be required. In this case, the window-opening habits have to be changed in a manner, that during heating season windows are only opened for short periods in case of extreme bad air quality. According to the ventilation requirement, the minimum ventilation rate must be about 0,5 per hour. This air change rate corresponds with ventilation

rate for buildings as a whole, even in the periodical increases of air flow during cooking or bathroom occupancy.

The total air change rate in dwelling houses, however, is the sum of ventilation rate (as result only power of ventilation system) and air leakage rate which is effect influence both the natural driving forces and tight of buildings, i.e. the a_m - or a_o - values. The study of these problems is anticipated to answer a question "Where is the limit of tightening the building envelope?".

From the viewpoint of thermal environment, the air velocity in the vicinity of windows (0,3-0,4 m) cannot be higher than about 0,1 m/s, i.e. the intensity of air flow characteristic for convective flux of man's body. For typical dimensions of windows and their gaps, the air flow coefficient varies between 1,5 and 1,8 m^3/mh at q daPa. This coefficient per "m sq." of windows area is about 0,6-1,2 m^3/h at 1 daPa (in average 1,0 m^3/m^2h). However, these values depending on pressure difference acting in the structure of the building (see the method proposed in text). Therefore, for the final definition of these coefficients the mean pressure differences arise as a result of the action stack and wind effect are necessary to determined. Based on the Δp_m - values from fig. 5, the

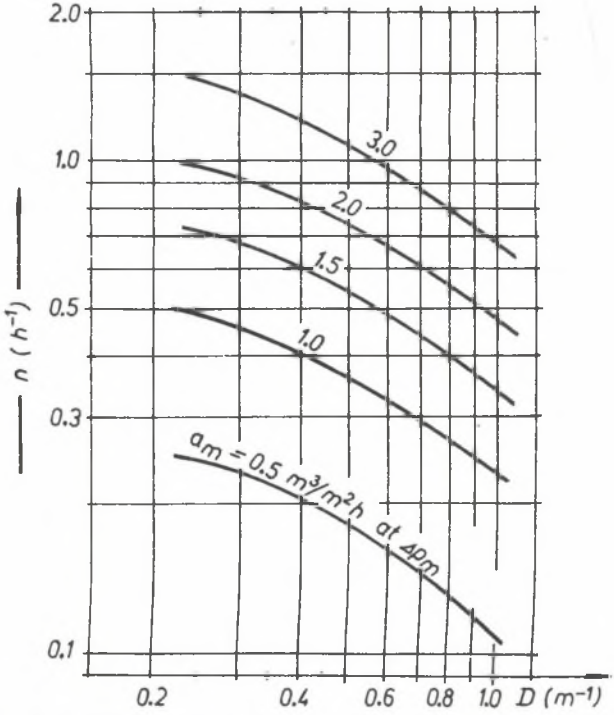

Fig. 8. Air infiltration rates of external walls of buildings

Rys. 8. Wymiana powietrza związana z wpływem naturalnych wymuszeń (infiltracja powietrza) w różnych budynkach mieszkalnych

total air infiltration was calculated. Results of these calculations (only for the average winter conditions, i.e. $0^{o}C$ and 5 m/s) are shown on fig.8. As shown, from this figure, the air infiltration rate equals the minimum ventilation rate, if the average air flow coefficient varies between 1,0 and 2,0 m^3/mh at 1 daPa for high-rise blocks and single-family houses, respectively. On the other hands, when in the building the exhaust-mechanical ventilation is applied, the pressure differences increase and the a_m - values must be reduced. In buildings with the supplyexhaust mechanical ventilation, especially, if waste heat recovery systems are applied, air leakages in house envelope have to be reduced to an absolute minimum. For the dimension of gaps tolerance in a typical windows, the average air flow coefficient may be decreased to about 0,05-0,2 m^3/mh at 1 daPa.

The basic results of analysis for the determination of tightening are presented and compared on fig. 9. As shown, the curve 3 is situated

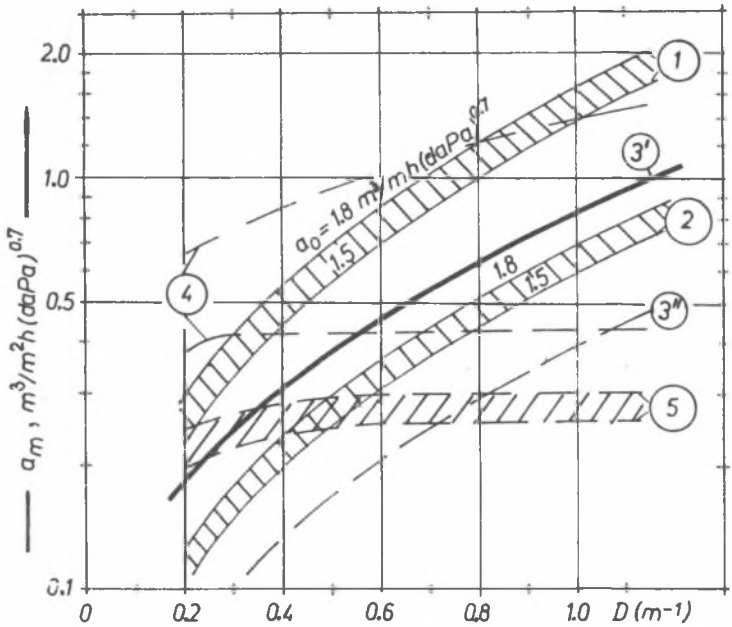

Fig. 9. The average air flow coefficients for different assumptions and buildings

1 - natural ventilation and a_o = 1,5-1,8 m^3/mh, 2 - exhaust-mechanical ventilation and a_o = 1,5-1,8 m^3/mh, 3 - natural ventilation and a_o = = 1,0 m^3/mh, 3 - exhaust-mechanical ventilation and a_o = 1,0 m^3/mh, 4 - natural ventilation and n = 0,5/h, 5 - exhaust-mechanical ventilation and n = 0,5/h

Rys. 9. Średnie współczynniki przenikania powietrza dla różnych budynków i założeń

1 - wentylacja naturalna i a_o = 1,5-1,8 m^3/mh, 2 - mechaniczna wentylacja wywiewa i a_o = 1,5-1,8 m^3/mh, 3 - wentylacja naturalna i a_o = 1,0 m^3/mh, 3 - mechaniczna wentylacja wywiewna i a_o = 1,0 m^3/mh, 4 - wentylacja naturalna i n = 0,5/h, 5 - mechaniczna wentylacja wywiewna i n = 0,5/h

in the centre of the figure's area and can be base for the limitation of tightening.

- In houses with the natural ventilation, the a_m - value must be equal or higher than 1,0 m^3/m^2 h. For typical percentage of windows area (φ_o), this coefficient is about 2,0 m^3/mh at 1 daPa.
- In buildings with the exhaust-mechanical ventilation, the average air flow coefficient varies between 0,3 and 0,4 m^3/m^2 h at 1 daPa, and the a_o - value is equal about 0,8-1,0 m^3/mh at 1 daPa.
- When the supply-exhaust mechanical ventilation is applied, the a_m - values varies between 0,2 and 0,3 m^3/m^2 h at 1 daPa or the a_o - value must be equal about 0,3 m^3/mh at 1 daPa. In high blocks with also the waste heat recovery (i.e. SEMV + VHR) these coefficients are 0,1-0,15 m^3/mh at 1 daPa.

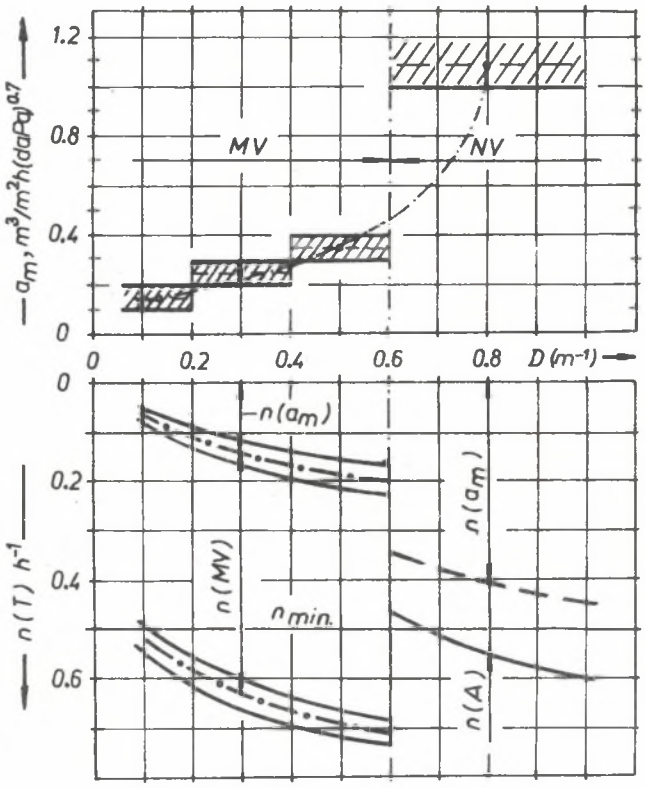

Fig. 10. Correlation of the total ventilation rates and types of buildings (by the ratio D)

Rys. 10. Zależność pomiędzy całkowitą wymianą powietrza i wielkością budynku (określoną przez wartość D)

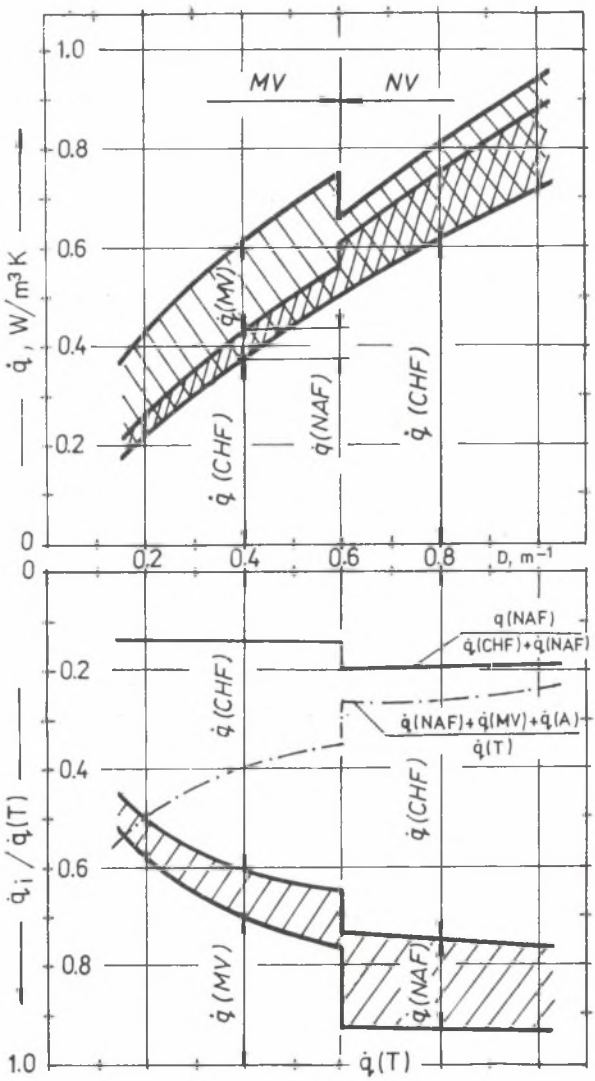

Fig. 11. Comparison of ventilation heat losses with infiltration and transmission heat demands

Rys. 11. Porównanie wentylacyjnych potrzeb cieplnych z całkowitymi stratami ciepła z uwzględnieniem strat ciepła wynikających z jego przenikania przez przegrody budowlane

Thus, the total ventilation rate is the function of building size (by the ratio D) and the power of the ventilation system. These n(T) - values are shown on fig. 10. This total ventilation rate varies between 0,5 and 0,7 per hour for buildings with the mechanical system. In houses with the natural ventilation and the gravitational ducts, this n(T) - value is in average about 0,5 per hour.

Results of these analyses provide the data for estimation of influence both of the air infiltration and ventilation on heat losses of different buildings. Heat losses per unital temperature difference and their fractions to the total heat consumption are illustrated on fig. 11. In these calculations, the k_m - values are in according with the Polish Norm (PN-82/B-02020) for buildings located in the 3-rd climatic zone in Poland.

The total heat demands vary between about 0,4 W/m^3K (for high-rise blocks) and 0,7 W/m^3K (for low and multi-family houses). In houses with the natural ventilation, these $\dot{q}(T)$ - values are higher than the above mentioned values.

The fraction of heat used on the air infiltration for all buildings is lower than 20% both to the heat losses connected with thermal protection of houses, i.e. $\dot{q}(NAF)/\{\dot{q}(CHF) + \dot{q}(NAF)\}$ and to the total heat demanded, i.e. $\dot{q}(NAF)/\dot{q}(T)$. The sum of heat losses connected with the natural ventilation, i.e. $\dot{q}(NAF) + \dot{q}(A)$ and the mechanical ventilation, i.e. $\dot{q}(MV)$ varies between 35% and 50% of total heat demands. In houses with the natural ventilation this fraction is about 24-28%.

As the ratio D becomes smaller with increasing size of buildings the fraction of ventilative heat flow will be higher for a multi-family or high-rise houses. When this ratio, i.e. D is about 1,0/m, the fraction of heat losses due to the natural air flow is almost stable. In these houses, the thermal protection problems are basic problems for heat conservations.

Conclusions

1. By the application of symplifying assumptions to the heat balance in buildings it has been shown, that the air infiltration and ventilation represent one of important factor in heat demanded of houses.

2. From analyses of large number of experiments in existing buildings, the simple method for prediction of the air leakage rates and their influence on the total heat losses of buildings as a whole was elaborated and used.

3. The purpose of this paper is to propose such amethod, based upon a simple theoretical model of infiltration, and to discuss its validity using whole house pressurisation and infiltration measurements.

The agreement demonstrated between the theoretical model and the data from measurements in twenty houses gives confidence that this simple theoretical model may provide a means of estimating house infiltration rates using leakage data obtained from whole pressurisation measurements.

4. Proposed methods for solution of discussed problems both from an energy point of view, healthy and comfortable conditions in houses are helpful for the definition both of the limitation of tightening the building structure and for prediction of heat losses in dwelling houses as a whole. These methods allow to analyse different strategies of heat reduction in building sector.

REFERENCES

[1] Nantka M.B.: Kierunki i możliwości zmniejszenia strat ciepła na cele wentylacji budynków mieszkalnych. I Konf. N-T, n.t. Racjonalizacja użytkowania energii w procesach ogrzewania i wentylacji, Katowice, listopad 1984.

[2] Praca IOWiOP, Pol. Śl., Czynniki warunkujące zmniejszenie zużycia energii na cele ogrzewania i wentylacji w budynkach mieszkalnych, PR-8,1981-85 (nieopublikowana).

[3] Nantka M.B.: Theoretical and Experimental Studies of Heat Flows Due to Air Infiltration and Ventilation, 7-th International Conference VHC, piestany 1984.

[4] Lindwal T., Manssen L.G.: Minimum Ventilation Rates, The National Institute of Environmental Medicine, Raport No 4, Sweden-Stockholm 1981.

[5] Nantka M.B.: Influence of Ventilation on Energy Losses in Buildings, 4-th International Conference HVAC, Varna 1984.

[6] Nantka M.B.: Zużycie a straty ciepła w budownictwie wielkopłytowym i możliwości ich zmniejszenia, Gospodarka Paliwami i Energią, Nr 6 i 7, 1984.

[7] Nantka M.B., Majerski S.: A correlation between thermal protection and air change rate in residential buildings. The International Symposium on Energy and Building Envelope, Thessaloniki 1986.

[8] Nantka M.B.: Air Infiltration and Ventilation in relation to the Thermal Performance of Dwelling Houses, Building Services Engineering, BSER&T, Vol. 7, No 1, CIBSE Series A, London 1986.

[9] Nantka M.B., Majerski S.: Ustalanie niezbędnych potrzeb cieplnych budynków mieszkalnych, COW, Nr 3, 1986.

[10] Kim S., Mehta K.C.: Full scale measurements on a flat roof area, Proceedings of the 5-th International Conference on Wind Engineering, Boulder, Colorado, July 1979.

[11] Akins R.E., Peterka J.A., Cermak J.E.: Average pressure coefficients for rectangular buildings, Proceedings Of the 5-th International Conference on Wind Engineering, Boulder, Colorado, July 1979.

[12] Lyberg M.D.: Models of infiltration and natural ventilation, The National Swedish Institute for Building Research, Biulletin M:23, 1983.

[13] Nantka M.B., Majerski S.: Metoda analizy rzeczywistych potrzeb cieplnych budynków mieszkalnych, COW, Nr 5, 1986.

[14] Nantka M.B.: Method of Heat Losses Prediction in Dwelling Houses, International Congress on Building Energy Management, ICBEM'87, Lausanne, october 1987.

[15] Nantka M.B.: Matematyczne modele naturalnych procesów wymiany powietrza w budynkach mieszkalnych, Zeszyty Naukowe Pol. Śl. (w druku).

[16] Sherman M.H., Grimsrud D.T.: Measurement of Infiltration Using Fan Pressurization and Weather Data, Proceedings of the 1-st AIC Conference, Berkshire, UK 1980.

[17] Warren P.R., Webb B.C.: The relationship between tracer gas and pressurisation techniques in dwellings, Proceedings of the 1-st AIC Conference, Berkshire, UK 1980.

[18] Nylund P.O.: Infiltration and Ventilation, Swedish Council for Building Research, D-22, Stockholm 1980.

Recenzent: Doc. dr inż. Jerzy Makowiecki

Wpłynęło do Redakcji 4.03.1988 r.

PROSTE METODY OBLICZANIA PRZEPŁYWÓW POWIETRZA
I STRAT CIEPŁA W BUDYNKACH MIESZKALNYCH

S t r e s z c z e n i e

Znajomość wymiany powietrza w budynkach mieszkalnych jest niezbędna zarówno dla oceny skuteczności stosowanych systemów wentylacji jak i określania związanych z nimi wentylacyjnych strat ciepła.
W referacie przedstawiono uproszczone metody analizy tych procesów wraz z przykładowymi wynikami takich analiz dla typowych budynków mieszkalnych.

УПРОЩЁННЫЕ МЕТОДЫ РАСЧЁТОВ ВОЗДУХООБМЕНА
И ПОТЕРИ ТЕПЛА В ОБЩЕЖИТЕЛЬНЫХ ЖИЛЫХ ЗДАНИЯХ

Р е з ю м е

Определение воздухообмена в жилых домах необходиме равно для оценки успешносми вентиляционных систем как и для требований тепла. В стате представлено прямые методы анализы этих процессов и результаты анализ для типических жилых домов.