III INTERNATIONAL CONFERENCE
TRANSPORT SYSTEMS TELEMATICS TST'03

ZESZYTY NAUKOWE
POLITECHNIKI ŚLĄSKIEJ 2003
TRANSPORT z.51, nr kol. 1608

microprocessor meter,
time parameters

Marek BARTCZAK[1]

MICROPROCESSOR METER OF RELAYS TIME PARAMETERS

The construction of measurement instrument of time parameters of relays based on microcontroller of 51 families has been presented in this paper. Major technical parameters of this instrument and its application are given. The workings of the measurement device are described too. Also, the accuracy of that instrument has been analyzed.

MIKROPROCESOROWY MIERNIK PARAMETRÓW CZASOWYCH PRZEKAŹNIKÓW

W materiale przedstawiono budowę przyrządu do pomiarów parametrów czasowych przekaźników w oparciu o mikrosterownik rodziny 51. Podano większość parametrów technicznych tego przyrządu oraz zastosowań. Opisano również parametry robocze urządzenia pomiarowego, a ponadto przeanalizowano dokładność przyrządu.

1. INTRODUCTION

In spite of the dynamic development of semiconductor technologies, relays still remain one of the components of electrical circuits in many newly developed control devices. They fulfill a function of intermediate elements between the electrical control circuit and one or several controlled circuits. Their basic operating parameters are among other operating times. The energization and de-energization times of a relay result from the required time of signal transmission from the control circuit to the controlled one. When selecting relays to the specific circuits also important are such times as closing, opening and changeover of contacts and times of appearance of contact vibrations at the changeover. The difference in the above mentioned times of identical relays may cause erroneous operation of controlled circuits. Moreover, vibration of relay contacts contribute to the reduced durability of the contacts themselves and may be source of noises in the electronic devices and circuits cooperating with the contacts. For this reasons, operation times of relays should not exceed maximum acceptable values.

[1] Institute of Transport Automation and Telematics, Radom University of Technology, Malczewskiego 29, 26-600 Radom,
Railway Scientific and Technical Centre, Chłopickiego 50, 04-275 Warsaw, Poland,

The microprocessor meter described below enables quick measurement of all time parameters of relays, as prescribed in the PN-93 E-88612 as well as recording of results and their transmission to the PC computer for processing using statistical programs or calculation spreadsheets.

2. METHODS OF MEASUREMENTS OF RELAYS TIME PARAMETERS

Two methods may be used to the measurement of relay time parameters. First of them consists in recording of voltage between the contact poles using an oscillograph and determination from the oscillogram time parameters based on measurements of length of appropriate voltage signal fragments using the known timescale [4]. A sample oscillogram of energization time measurement for a railway protection relay JRB 11129 of ZWUS (now Bombardier Transportation manufacturing) Katowice is shown on Fig.1. This method is labour-consuming and not very accurate and is not suitable for automatic recording of measurement results.

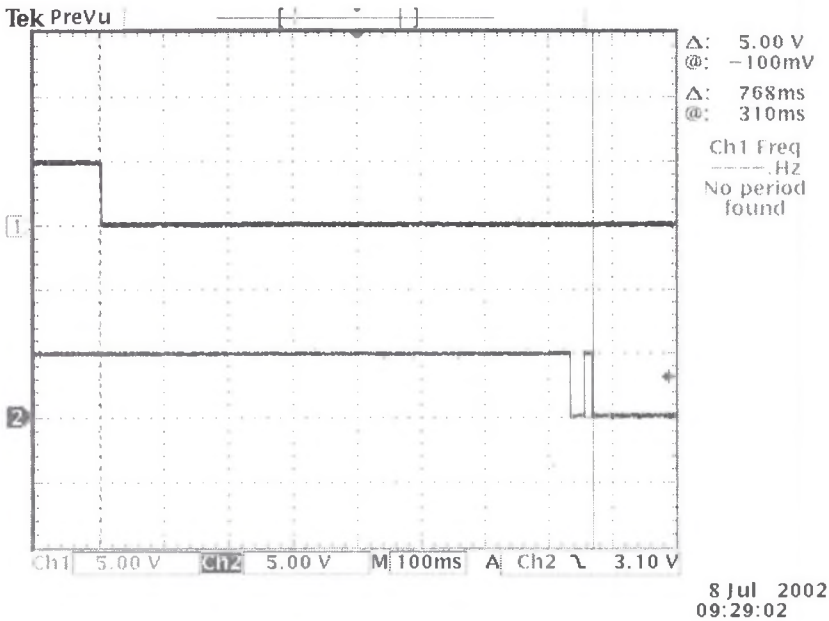

Fig.1. Oscillogram of energization time measurement of relay JRB 11129

Second method consists in counting of impulses fed to the counter input within a determined time (Fig.2). Calculated impulses are produced by pattern impulse generator and fed to one of the inputs of measuring gate. After appearance of a signal informing about the beginning of measurement, pattern impulses are passed through the measuring gate to the counter input and counted by this counter. Closing of measuring gate and termination of

counting takes place at the moment of appearance of signal informing about completion of measurement. Contents of the counter after decoding in the decoder is transferred to the display as the result of measurement. This method does not have the same drawbacks as oscillograph one. It is commonly used in the digital time meter. [1,2,3].

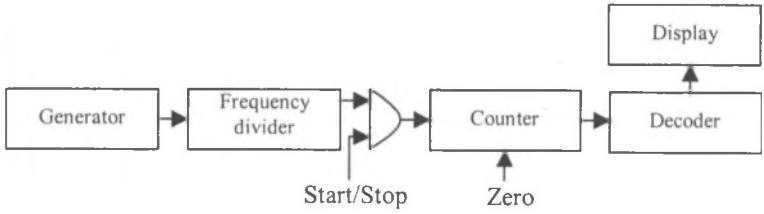

Fig.2. Time measurement principle

3. MICROPROCESSOR METER

3.1. CONSTRUCTION AND MORE IMPORTANT PARAMETERS

The circuit diagram of a microprocessor meter [1,2] is presented on Fig.3.

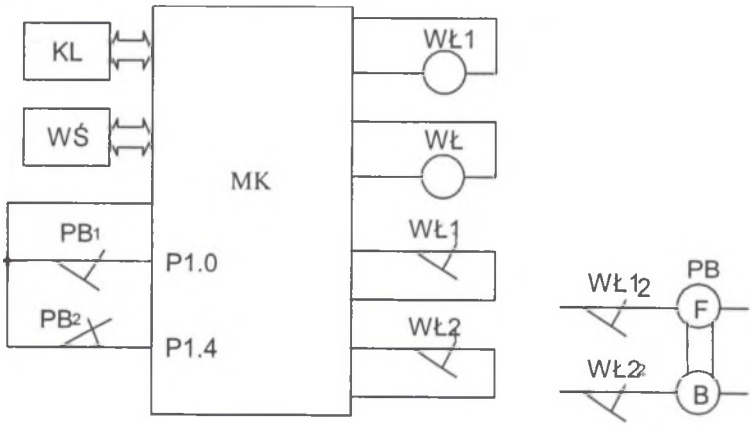

Fig.3. Schematic diagram of a microprocessor meter

The structure of this meter is based upon a microcontroller SAB80C517 of SIEMENS. This microcontroller contains within the system, among others, a counter T2 that may realize time measurement function and a CRC unit provided with registers where the momentary value of T2 counter may be written.

The moment of writing is marked by external signals P1.0 and P1.4 of port P1. Selection of an active slope of impulses is software selected.

To the microcontroller MK the keyboard KL, display WŚ, switch-on relays WŁ1 and WŁ2 are connected along with their active contacts WŁ11 and WŁ21. The tested relay PB is controlled by active contacts WŁ12 and WŁ22 of switch-on relays WŁ1 and WŁ2, and its contacts PB1 and PB2 are connected to the inputs P1.0 and P1.4 of microcontroller MK, where the change of signal level results in writing the momentary contents of counter T2 to CRC register.

Keyboard KL, consisting of our keys, enables selection of meter function and measurement parameters, such as type of relay tested, measured time parameters and number of measurements. Menu of the meter is shown on the Fig.4. Display WŚ serves the purpose of displaying the names of meter functions, parameters and results of measurements. In order to display any character (characters and numbers) fully understandable to the user, an LCD display was used.

The meter enables measurements of all relay time parameters determined in PN-93 E-88612 independent of type of power supply current and type of relay operation, and namely:
- relay energizing time,
- relay de-energizing time,
- time of contact vibration,
- time of contact operation,
- interruption time at change over of contacts.

The most important parameters of the instrument are follows:

- measuring range	0.1ms to 2^{32}-1μs
- accuracy	0.1ms
- microcontroller type	SAB80C517 by SIEMENS,
- external resonator frequency	12MHz,
- pattern impulse frequency	1MHz,
- maximum control power of switch-on relays	30W DC/60VA AC (60W DC/120VA AC),
- maximum control voltage of switch-on relays	220V DC/250V AC,
- maximum control current of switch-on relays	1A DC/AC,
- keyboard	4x1,
- indicator	display LCD,
- power supply	~220V±10%, 50Hz,
- power consumption	about 4VA.

In order to enable measurement result processing using statistic software and spreadheets, the instrument may be connected to the PC computer and data are fed by serial interface.

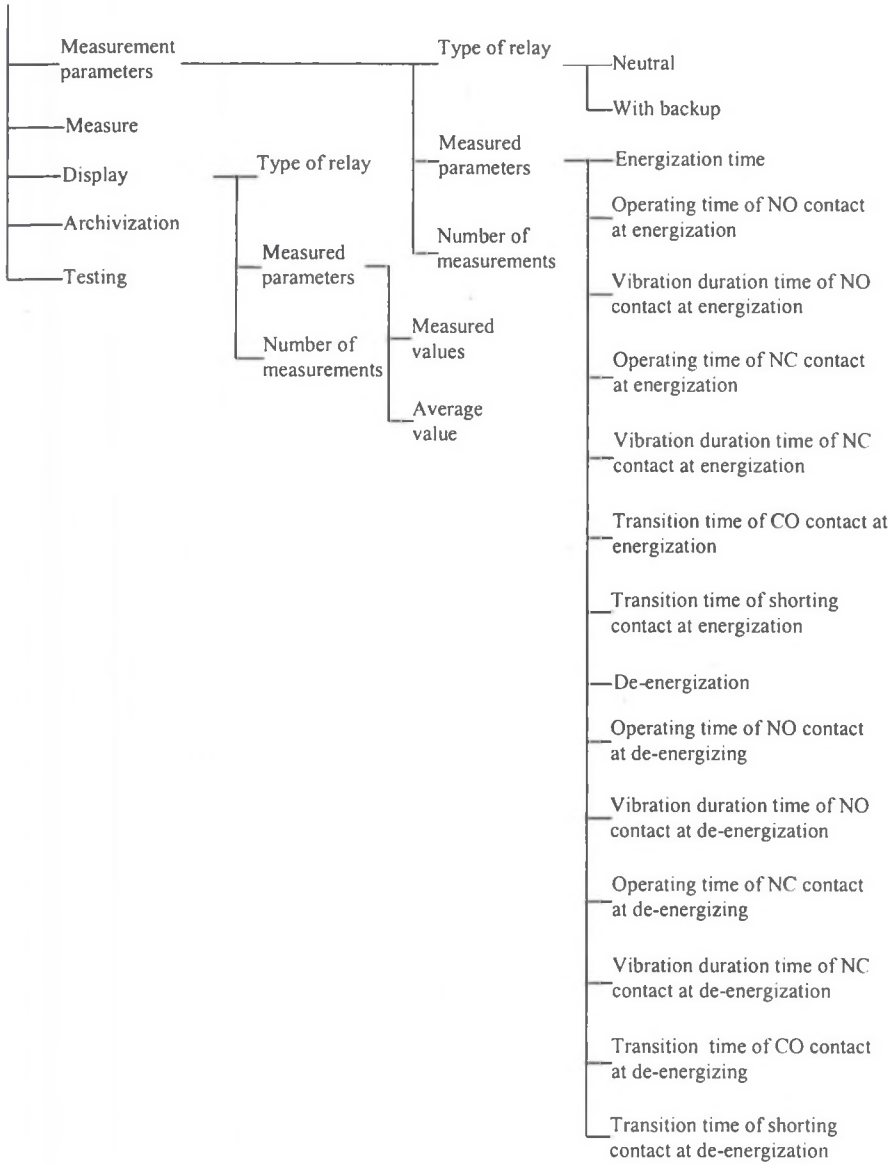

Fig.4. Menu of the microprocessor meter

The instrument may be used to measure quality of manufactured relays, verification tests and others used in laboratory techniques. General layout of the microprocessor instrument is shown on Fig.5.

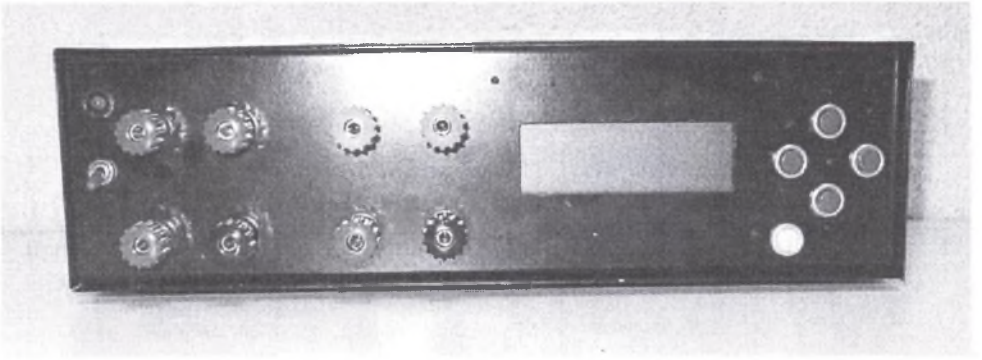

Fig.5. General layout of microprocessor controller

3.2. PRINCIPLE OF OPERATION

The principle of operation of microprocessor instrument will be explained on the basis of an excitation time of a relay with magnetic remanence. The overall network of measuring program is shown on Fig.7. The characteristics of voltages at the excitation time measurement is shown on Fig.6. After selecting the measurement parameters from the menu, and then function POMIAR (measurement) the microcontroller MK determines the active slope of signal from P1.0 input, where the active contact PB_1 is connected, marking the moment of writing the momentary value of counter T2 to the unit register CRC, unblocks interrupts, resets (zeroes) counter T2 and energizes the switch on relay WŁ1. At the moment when the anchor of WŁ1 is attracted, the active contact $WŁ1_2$ will close the circuit of power supply for energization coil F of tested relay PB. Microcontroller MK, after recognizing the closing of active contact $WŁ1_1$, informing about the beginning of measurement will start up the counter T2 counting the internal clock pulses of known and fixed frequency. As a result of status change of the tested relay PB its contacts PB_1 and PB_2 are changed over. Closing of active contact PB_1 causes the change of signal status at input P1.0 of microcontroller MK and as a consequence writing of momentary value of the counter T2 to the CRC register associated with this input. The writing function is realized each time after closing of active contact PB_1. In the case of T2 counter overflow, the additional counter is incremented. After elapse of assumed time (ca. 2s), measured from the moment of last closing of the active contact PB_1 microcontroller MK blocks the writing function, stops counter T2 and memorizes the contents of CRC as energizing time value. This value, after digital calculation is displayed on the WŚ display. After displaying of measurement result and de-energizing the switch-on relay WŁ1, and subsequent energizing of switch on relay WŁ2 in order to de-energize the relay PB under test, microcontroller MK is ready to make the next measurement at the same parameters as in the previous one or revised.

Similarly the contact PB_1 (PB_2) time operation is measured upon energizing the relay. The difference consists only in the stopping of T2 counter directly after the first closing (opening) of contact. Whereas during measurement of duration of contact PB_1 (PB_2) vibrations upon energizing of the relay the counter T2 is started up at the moment of first closing (opening) of the contact. Measurement of time parameters at de-energizing of relay are realized similarly as measurement of analogical parameters at energizing.

Function WYŚWIETLANIE (Display) enables display of parameters and results of measurements, while the results are displayed with accuracy up to 0.1ms

Function ARCHIWIZACJA (Archivizing) enables sending of measurement data to the PC computer. Before being sent, the byte is converted into hexadecimal code, which means that only four least significant bits may be used from each byte. First the code of relay being tested is being sent (1 - neutral, 2 - remanence), occupying one byte in RAM memory and the number of measurements from the range of 1 to 50 (1 byte), and then the code of measured time parameters, being a number from 1 to 14 (1 byte) and measured values and mean value (4 bytes each). After sending of all data the $ (dollar) sign is sent to inform the PC about end of transmission.

Function TESTOWANIE (testing) serves the purpose of verification of correct operation of the instrument.

Fig.8 shows the method of connecting a remanence relay to the instrument. The stand for measurement of relay time parameters is shown on Fig.9.

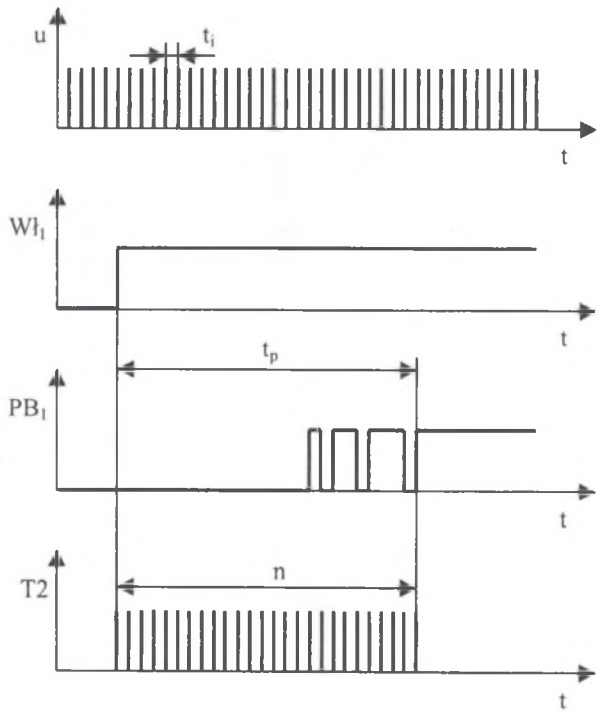

Fig.6. Responses of voltage during for measurement of relay energizing time

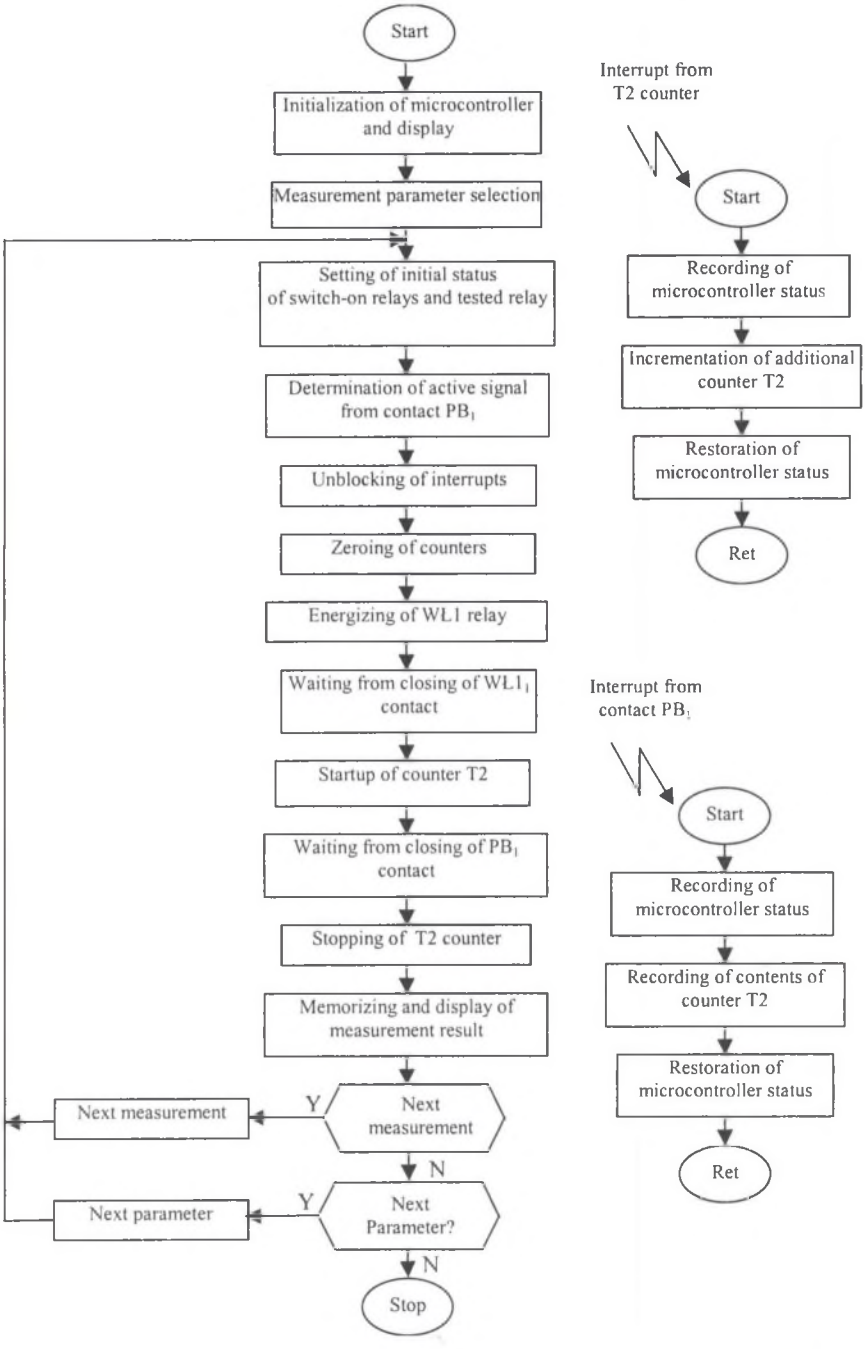

Fig.7. Overall network of program operation for measurement of relay energizing time

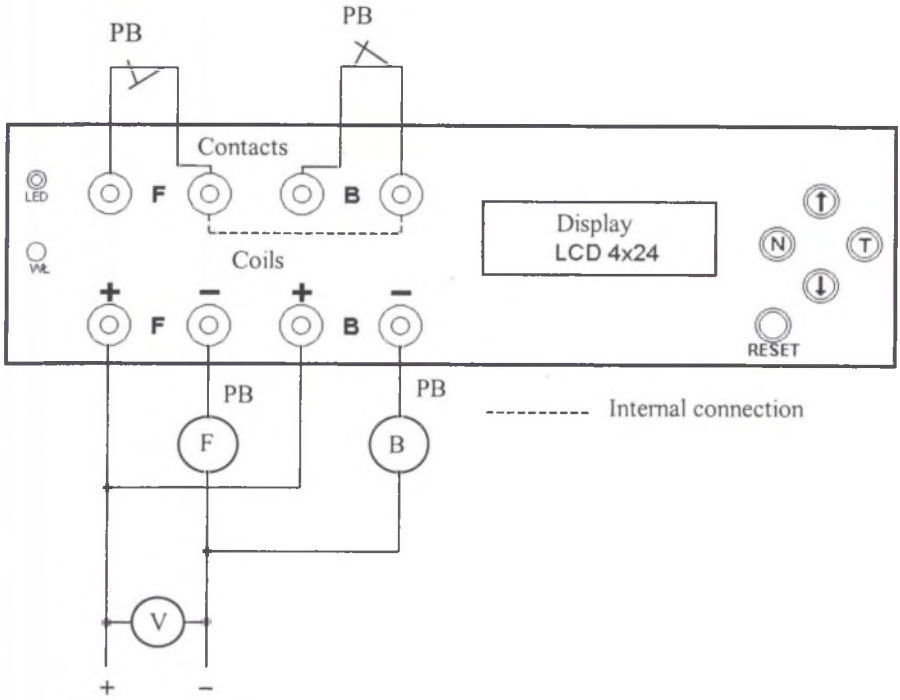

Fig.8. Method of connecting the remanence relay to the microprocessor instrument

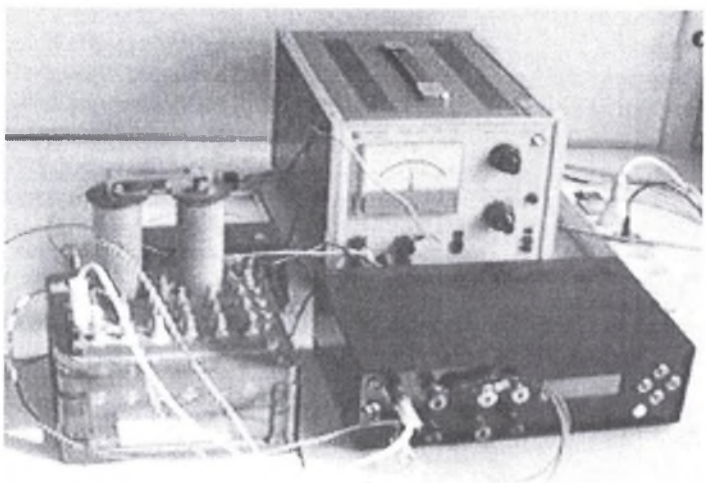

Fig.9. Stand for measurement of relay time parameters using the microprocessor meter

3.3. ACCURACY

Accuracy of the measurement is limited by the microcontroller speed. For higher frequency of external resonator and longer times the error is lesser. During measurement of short times the error is higher. A possibility of improving it exists, however. For this purpose it is sufficient to use resonator with higher frequency. The minimum frequency of resonator should be 12MHz. This means that duration of one machine cycle of the microcontroller will be equal to 1μs, and the frequency of pulses counted by the counter T2 - 1MHz. Quartz resonator ensures high stability of frequency.

In order to determine the measurement accuracy tests have been performed consisting in measurement of time parameters of selected railway protection relays and comparing them with the values obtained with those obtained using digital oscilloscope method. The tests performed have shown that the accuracy of measurement using the meter is not worse than the accuracy of oscilloscope method. Results achieved using the instrument and the oscilloscope are close, which proves the correct operation of the meter and possibility of its practical application, mainly because of speed and accuracy of the measurement.

4. SUMMARY

Construction of a microprocessor meter for measurement of time parameters of relays is based upon microcontroller of 51 family. Method of measurement consists in counting of internal clock impulses fed to the microcontroller counter in the time determined by the signals from the contacts of tested relay. Due to the hardware readout of momentary value of the counter, the meter features high accuracy of the measurement. Advantages of the instrument are: automatic measurement of any combination of measured relay time parameters, possibility of programming of number of measurements and large measurement range, as well as easy operation.

BIBLIOGRAPHY

[1] BARTCZAK M., NOWAK A.: Urządzenie cyfrowe do pomiaru czasu zadziałania przekaźników (Digital devices for measurement of relay operation time), Patent application P 352784, Politechnika Radomska 2002.

[2] BARTCZAK M., NOWAK A.: Mikroprocesorowy miernik parametrów czasowych przekaźników (Microprocessor metering instrument of relay operation time), II National Conference of Electronics, Politechnika Koszalińska 2003.

[3] JAKUBIAK M., LESIAK P.: Uniwersalny cyfrowy miernik parametrów czasowych przekaźników kolejowych (Versatile digital metering instrument of railway relay operation time), Automatyka Kolejowa Nr 6/1983, s. 108-109.

[4] PN-93 E-88612 Przekaźniki energoelektryczne. Procedury badań i pomiarów elektromechanicznych przekaźników pomocniczych (Energo-electrical relays. Test and electro-mechanical measurements procedures).

Reviewer: Ph. D. Jerzy Mikulski