ZESZYTY NAUKOWE POLITECHNIKI ŚLĄSKIEJ 2000
Seria: GEOMETRIA I GRAFIKA INŻYNIERSKA z.3 Nr kol. 1453

Eva BARANOVÁ, Viola VAVRINČÍKOVÁ*
Technical University
Department of Descriptive Geometry
Department of Applied Mechanics*
Vysokoškolská 4 042 00 Košice – SLOVAKIA
Tel: 421-95-6024115 e-mail:baranova@svfnov.tuke.sk

GEOMETRICAL CONSTRUCTION OF BLADE PROFILES

Summary. The paper deals with possibility of the curve simulation of define aerodynamic profiles proceeding from synthesis of the plane mechanism based on display equations method. The influence of parameter analysis on profile shapes enables us to write the catalog of basic curve types used by the optimizing methods.

GEOMETRYCZNA KONSTRUKCJA PROFILÓW ŁOPATEK

Streszczenie. W pracy przedstawiono konstrukcję krzywej powstałej z pewnego przekształcenia okręgu, której kształt może przybliżać spotykane w pratyce profile aerodynamiczne, np. łopatek turbin. Przekształcenie daje się zrealizować za pomocą prostego, płaskiego przyrządu. Ideę takiego przyrządu (schemat kinematyczny) autorki przedstawiły na jednym z rysunków ilustrujących pracę. W zależności od doboru 4 parametrów występujących w przekształceniu krzywa może przybierać 24 (liczba kombinacji tych parametrów) kształty. Dla celów praktycznych, wykluczając rozwiązania zawierające punkty urojone, liczba ta ogranicza się do 12. Autorki sprecyzowały wymagania stawiane czterem parametrom dla uzyskania rozwiązań praktycznie użytecznych.

INTRODUCTION

In the paper we present a mathematical expression of a blade profile obtained by a transformation of a circle. The function of a blade profile is an algebraic biquadratic equation of two variables with four coefficients. We refer to a geometrical construction of profiles constituted by the above mentioned transformation. Further we make an analysis of the parameters effect on the form of the generated curves together with the restriction of the domains of the parameters for a set of basic types of curves.

GEOMETRICAL CONSTRUCTION OF AERODYNAMIC PROFILES

Universal n-dimensional mechanism to creating curves of aerodynamic profiles has general invocation for various blade profile forms that are requested by technical practice.

Geometrical construction of curves of aerodynamic profiles proceeds from the transformation of a circle, an ellipse or another curve according to the following procedure.

Let us cut the set of rays with the center in the point O, that project the point order of the base curve (e), by the line (m) or by another line of the m-th degree (Fig.1). The point orders on the curve (e) and (m) are control or determining formation of resultant curve of the finding shape. The rays of the corresponding points of control curves cut into finding curve of aerodynamic profile.

The form and the size of the profile depend from the mutual positions and the forms of elementary curve (c) and curve (b), and also from the ray direction.

Mathematical expression for this profile of blade is the function:

$$F(x,y)=0 \tag{1}$$

Let us choose in the plane two orthogonal coordinate systems (O; x,y) and (O;ξ,η), that centers are coincident and nevertheles it is agreed:

$$x \neq \xi \text{ and } y = \eta \tag{2}$$

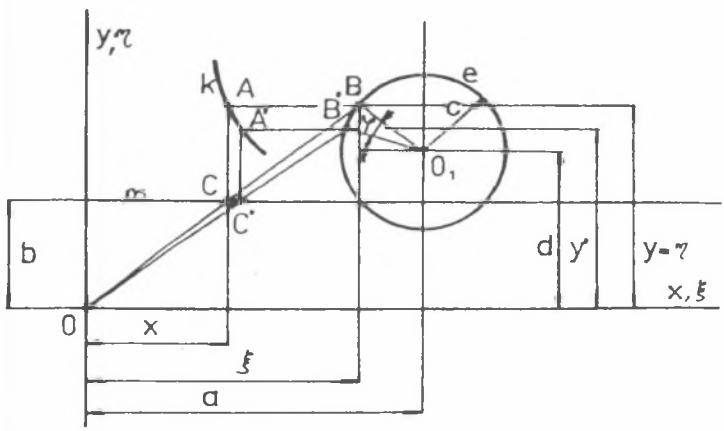

Fig.1. Design of geometrical construction
Rys.1. Szkic konstrukcji geometrycznej

Let (e) be a circle with the radius c and with the center $O_1(a,d)$ in the coordinate system (O;ξ,η). It is the first spine curve and its equation is:

$$(a-\xi)^2+(d-\eta)^2=c^2 \tag{3}$$

The straight line (m) parallel to axis x in the distance b is the second spine curve.

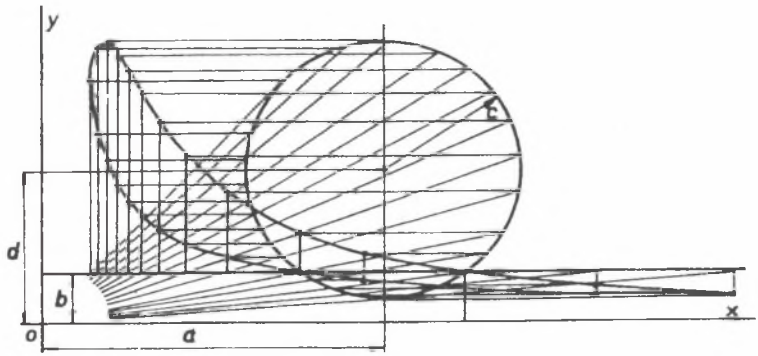

Fig.2. Geometrical construction of profiles
Rys.2. Konstrukcja geometryczna profilów

Let B(ξ,η) be the arbitrary point of the circle (e). We assign the point B to the point A(x,y) of a tracking curve. According to Fig.1 we have:

$$\frac{x}{b} = \frac{\xi}{\eta} \tag{4}$$

and therefore

$$\xi = \frac{xy}{b} \tag{5}$$

Setting (2), (5) into (3) and after editing we obtain an algebraic equation of two variables x and y:

$$x^2y^2 - 2abxy + b^2y^2 - 2b^2dy + a^2b^2 - b^2c^2 + b^2d^2 = 0, \tag{6}$$

where a,b,c,d are real coefficients.

Equation (6) express the curve of blade profile. The geometrical construction of this profile is illustrated in Fig.2. We can obtain mechanism for creating aerodynamic profiles by mechanization of this geometrical construction Fig.3.

We can express the function (6) also by means parametric equations with respect to the angle φ:

$$x = b\frac{a - c\cos\varphi}{d + c\sin\varphi}, \tag{7}$$

$$y = d + c\sin\varphi, \tag{8}$$

where φ ε <0°,360°> for closed curve of aerodynamic profile.

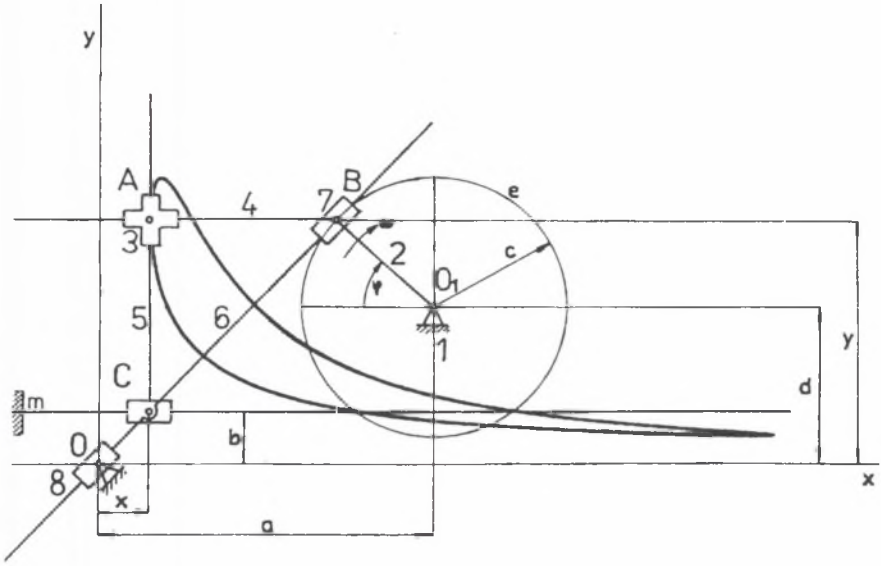

Fig.3. Kinematic scheme of plane mechanism
Rys.3. Kinematyczny schemat mechanizmu płaskiego

ANALYSIS OF THE PARAMETERS EFFECT ON THE PROFILES FORM

The mentioned mechanism create various curves depending upon the mutual proportion of all parameters a,b,c,d and their changes. They are curves of aerodynamic profiles or blade profiles.

If a=0 then mechanism generate symmetric curves. In the case when d=0 or c=d an generated curve has imaginary point and the curve is not closed. Practically meaning of this blade profile is only in the case if it is treated in the domain of the imaginary point. Therefore the parameters b,c,d must satisfie to condition:

$$0<c<d \quad \text{and} \quad b\neq 0 \tag{9}$$

for real closed curves.

We can proporcionaly increase or decrease the profile size if we mentain the relation between individual parameters and the profile form is not changed.

The set of basic style curves forms 24 profiles. This number corresponds to all possible combinations (4!) of mutual proportions of parameters a,b,c,d. Only 12 profiles are without an imaginary point. It is possible to restrict the domains of individual parameters of closed curves according to (9) Fig.4a,b.

The changes of the parameters may lead to the transition of one type of curves to the other one provided that parameters of one domain transit to the other one. We can bring near the curves of the blade profiles used by technical practice by an optimal change of parameters in individual domains.

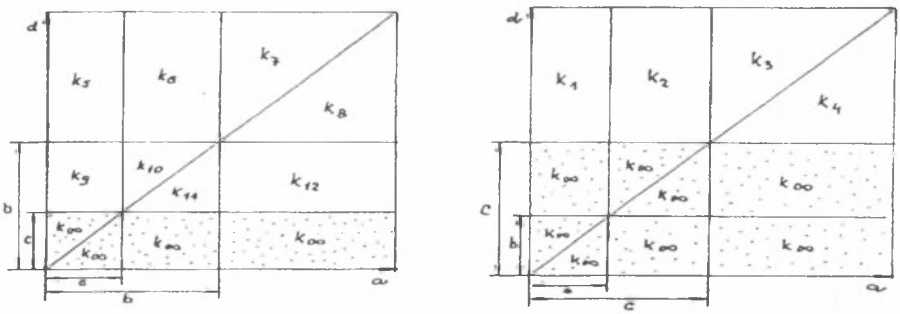

Fig.4a,b. Domains of parameters for basic types of profiles
Rys.4a,b. Obszary parametrów dla podstawowych profilów

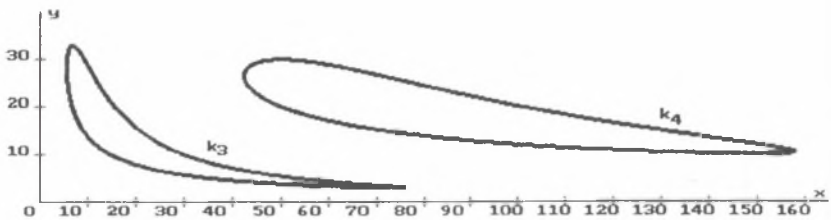

Fig.5. Illustration of basic profiles types
Rys.5. Rysunek podstawowych typów profilów

REFERENCES

1. Medvec, A., Vavrinčíková,V., Chlebová, Z., Belík, B., Hidvéghyová, M.,: Analýza, syntéza a optimalizácia charakteristík mechanizmov. Záverečná výskumná správa. Košice 1980
2. Vavrinčíková, V.: Príspevok ku kinematickému riešeniu rivinného mechanizmu. Strojnícky časopis 4/1986, Bratislava 1986
3. Vavrinčíková, V., Baranová, E.: Track control of robots mechanical system. Strojné inžinierstvo´98, Bratislava 1998
4. Vavrinčíková, V., Baranová, E.: Modelovanie lopatkových profilov. Riadenie tekutinových systémov´98, Súľov1998

Recenzent: Dr inż. Krzysztof T. Tytkowski
Politechnika Śląska

Abstract

In the paper it is analyzed a plane mechanism with 4 parameters which point A created the curves similar to the forms of the blade profiles of steam or gas turbines and compressor blades.

The analysis of the mechanism parameters effect on the form of the created curves and a definition of parameter domains for real curves forming is one of the basic requirements conditioning further solution. These bounded domains are used the zero approximation methods as the zero approximation of the initial coefficients estimation.