ZESZYTY NAUKOWE POLITECHNIKI ŚLĄSKIEJ 1976

Seria: Matematyka-Fizyka z. 28 Nr kol. 465

Ernest Czogała

RANDOM VIBRATIONS OF CYLINDRICAL SHELL DUE TO AN EXCITATION WITH VARYING FREQUENCY

The problem of random forced vibrations in elastic closed cylindrical shells of finite length has been discussed in this paper. Loading of that system is defined as a radial axisymmetric random field with a uniformly varying frequency. Nonstationary responses for variances of shell displacements have been determined analytically and numerically. As a result of calculations within certain intervals of time resonance levels of displacement variances have been observed.

Introduction

Many shell structures are subjected to excitations which are of random nature. As examples can be used aircraft and missile structures subjected to acoustic and aerodynamic loads.

In many applications, the response of such continuous systems will be strongly time - dependent, especially in these cases, when the excitation is a nonstationary random process, in particular a process with time-varying frequency.

Vibrations of the systems excited by loading with varying frequency have been studied by Lewis [4], Filipow [5] and Stronge [6] but with applications to one-degree of freedom of the dynamical system. Tylikowski was dealing in his paper [7] with the random vibrations of a linear system with one-degree of freedom excited by a force being a stochastic process with uniformly varying frequency.

In this paper has been made an extension of analysis for such continuous system like cylindrical shells of finite length under excitation which is a nonstationary homogeneous random field. It is assumed that the cylindrical shell is subjected to an action of a distant acoustic random field with uniformly time - varying frequency.

Formulation and Solution Method

The well-known equilibrium equations of Donnell [1], [3] for thin-walled circular cylindrical shells are:

$$\frac{\partial^2 u}{\partial \xi^2} + \frac{1-\nu}{2}\frac{\partial^2 u}{\partial \varphi^2} + \frac{1+\nu}{2}\frac{\partial^2 v}{\partial \xi \partial \varphi} + \nu\frac{\partial w}{\partial \xi} = -\frac{XR^2}{D}$$

$$\frac{1+\nu}{2}\frac{\partial^2 u}{\partial \xi \partial \varphi} + \frac{\partial^2 v}{\partial \varphi^2} + \frac{1-\nu}{2}\frac{\partial^2 v}{\partial \xi^2} + \frac{\partial w}{\partial \varphi} = -\frac{YR^2}{D} \tag{1}$$

$$\nu\frac{\partial u}{\partial \xi} + \frac{\partial v}{\partial \varphi} + (1 + c^2\nabla^2\nabla^2)\, w = \frac{ZR^2}{D} \qquad \nabla^2 = \frac{\partial 2}{\partial \xi^2} + \frac{\partial^2}{\partial \varphi^2},$$

where for the sign convention and shell theory the following symbols are being used

R - radius of middle surface of cylindrical shell
E - modulus of elasticity of ahell material
h - shell thickness
ν - Poisson's ratio

$$D = \frac{E\,h}{1-\nu^2}, \qquad c^2 = \frac{h^2}{12\,R^2}$$

u,v,w- shell displacements in the x,y,z directions
ϱ - density of shell material
ξ, x - coordinates in longitudinal direction
φ, ψ - dimensionless coordinates in circumferential direction
X,Y,Z- loads in longitudinal, circumferential and radial directions respectively

Solutions of displacements for any loads and particular boundary conditions can be made by means of determining of Green's functions.

The system is assumed to be at rest for fime $t<0$, with less than critical damping.

Under assumplion that $X = Y = 0$,

$$Z = q(\xi,\varphi,t) - \varrho h\,\frac{\partial^2 w(\xi,\varphi,t)}{\partial t} - 2\varepsilon\,\frac{\partial w(\xi,\varphi,t)}{\partial t} \tag{2}$$

(loads in longitudinal and circumferential directions are zero respectively, ε is an external damping coefficient, q is a radial loading of the shell) the solution of displacements can be written as

$$\begin{bmatrix} u(\xi,\varphi,t) \\ v(\xi,\varphi,t) \\ w(\xi,\varphi,t) \end{bmatrix} = R^2\int_0^1\int_0^{2\pi}\int_0^t \begin{bmatrix} G_u^{(1)}(\xi,x,\varphi,\psi,t,\tau) \\ G_v^{(1)}(\xi,x,\varphi,\psi,t,\tau) \\ G_w^{(1)}(\xi,x,\varphi,\psi,t,\tau) \end{bmatrix} \cdot$$

$$\cdot\, q(x,\psi,\tau)\,dx\,d\psi\,d\tau. \tag{3}$$

The Green's functions $G\left\{\begin{matrix}1\\ \cdot\end{matrix}\right\}(\xi,x,\varphi,\psi,t,\tau)$ are the respective displacements at ξ,φ,t due to a unit radial load acting at x,ψ,τ and for the simple supports at the ends of the closed shell of finite length ($\xi = 0$ and $\xi = 1$) are given as follows

$$\begin{bmatrix} G_u^{(1)}(\xi,x,\varphi,\psi,t,\tau) \\ G_v^{(1)}(\xi,x,\varphi,\psi,t,\tau) \\ G_w^{(1)}(\xi,x,\varphi,\psi,t,\tau) \end{bmatrix} =$$

$$= \frac{2}{\pi L R \varrho h} \sum_{m=1}^{\infty} \sum_{n=0}^{\infty} \frac{\lambda_{mn}}{\bar{\omega}_{mn}} \begin{bmatrix} \frac{\Phi_{u\,mn}}{G_{w\,mn}} \cos\frac{m\pi\xi}{l} \cos n(\varphi-\psi) \\ \frac{\Phi_{v\,mn}}{G_{w\,mn}} \sin\frac{m\pi\xi}{l} \sin n(\varphi-\psi) \\ \sin\frac{m\pi\xi}{l} \cos n(\varphi-\psi) \end{bmatrix} \cdot$$

$$\cdot \sin\frac{m\pi x}{l}\, e^{-\varepsilon_{mn}(t-\tau)} \sin\bar{\omega}_{mn}(t-\tau)\,, \tag{4}$$

where

$$\bar{\omega}_{mn} = (a_{mn}^2 - \varepsilon_{mn}^2)^{\frac{1}{2}}, \quad \varepsilon_{mn} < a_{mn}$$

$$a_{mn} = \left\{ \frac{E}{(1-\nu^2)R^2\varrho} \left[(1-\nu^2)\left(\frac{m\pi}{l}\right)^4 / \left(\frac{m^2\pi^2}{l^2} + n^2\right)^2 + \right.\right.$$

$$\left.\left. + c^2\left(\frac{m^2\pi^2}{l^2} + n^2\right)^4 \right]\right\}^{\frac{1}{2}}$$

are natural frequencies of the shell

m,n are integers

$$\lambda_{mn} = \begin{cases} 1/2 & \text{for} \quad m \geqslant 1 \quad n = 0 \\ 1 & \text{for} \quad m \geqslant 1 \quad n \geqslant 1 \end{cases}$$

$l = L/R$ is a dimensionless length of shell

$\Phi_{u\,mn}$, $\Phi_{v\,mn}$ and $G_{w\,mn}$ are the polynomials, obtained from system of equations (1), of the form

$$\Phi_{u\,mn} = -\nu \frac{m\pi}{l} \left(\frac{1-\nu}{2} \frac{m^2\pi^2}{l^2} + n^2\right) - \frac{1+\nu}{2} \frac{m\pi}{l} n$$

$$\Phi_{v\,mn} = -\left(\frac{m^2\pi^2}{l^2} + \frac{1-\nu}{2} n^2\right) n - \nu \frac{1+\nu}{2} \frac{m^2\pi^2}{l^2} n \tag{5}$$

$$G_{w\,mn} = \frac{1-\nu}{2} \left(\frac{m^2\pi^2}{l^2} + n^2\right)^2 .$$

Making use of a well-known formulae of correlation theory, we can determine the principal characteristics of a random field at a given point.

Assuming that the mean values of displacements at any point are zero, let us calculate furthermore second correlation functions of displacements providing a characteristic of variances and then dispersions.

Multyplying both sides of equations (3), written for different arguments in either case, and averaging, we obtain

$$\begin{bmatrix} K_{uu}(\xi_1, \varphi_1, t_1, \xi_2, \varphi_2, t_2) \\ K_{vv}(\xi_1, \varphi_1, t_1, \xi_2, \varphi_2, t_2) \\ K_{ww}(\xi_1, \varphi_1, t_1, \xi_2, \varphi_2, t_2) \end{bmatrix} =$$

$$= R^4 \iint_S \iint_S \int_0^{t_1} \int_0^{t_2} \begin{bmatrix} G_u^{(1)}(\xi_1, x_1, \varphi_1, \psi_1, t_1, \tau_1) & G_u^{(1)}(\xi_2, x_2, \varphi_2, \psi_2, t_2, \tau_2) \\ G_v^{(1)}(\xi_1, x_1, \varphi_1, \psi_1, t_1, \tau_1) & G_v^{(1)}(\xi_2, x_2, \varphi_2, \psi_2, t_2, \tau_2) \\ G_w^{1}(\xi_1, x_1, \varphi_1, \psi_1, t_1, \tau_1) & G_w^{(1)}(\xi_2, x_2, \varphi_2, \psi_2, t_2, \tau_2) \end{bmatrix} \cdot$$

$$\cdot\, K_{qq}(x_1, \psi_1, \tau_1, x_2, \psi_2, \tau_2)\, dx_1\, d\psi_1\, dx_2\, d\psi_2\, d\tau_1\, d\tau_2 , \tag{6}$$

where

$K_{(..)}(\xi_1, \varphi_1, t_1, \xi_2, \varphi_2, t_2)$ is the correlation function of respective displacements

$K_{qq}(x_1, \varphi_1, \tau_1, x_2, \psi_2, \tau_2)$ is the correlation function of radial loads of the cylindrical shell

and S is the shell surface.

Let us assume furthermore, that the cylindrical shell is loaded axisymmetrically by a nonstationary homogeneous random field which may be a result of an action of pressure of a distant acoustic field with uniformly time-varying frequency. The wave surfaces are considered as the parallel planes and it is assumed that the planes are perpendicular to the longitudinal shell axis x.
This is illustrated in Fig 1.

Thus the angle of the wave vector to x - axis is $\vartheta = \pi/2$. Random field defined in this way can be approximated by a sum of uncorrelated harmonics with random amplitudes A_j and phases δ_j and takes a form

$$q(x,t) = \sum_{j=1}^{N} A_j \cos\left(\frac{\omega_j t^2}{2} + \frac{\gamma_j \sin\vartheta}{c} x + \delta_j\right) \tag{7}$$

where c is sound velocity and γ_j is a coefficient determining space-change of a random field. It is assumed furthermore that A_j and δ_j are uncorrelated random variables and there has been given a probability density function of amplitudes $g(A_j)$ and constant probability density function of phases $g(\delta_j)$ in the section $[0,2\pi]$ by means of the formula

$$g(\delta_j) = \frac{1}{2\pi}\left[H(\delta_j) - H(\delta_j - 2\pi)\right]$$

where $H(\cdot)$ is the Heaviside's distribution.

The mean value of that random field equals zero and the correlation function takes a form

$$K_{qq}(x_1, \tau_1, x_2, \tau_2) = \sum_{j=1}^{N} B_j \cos\left[\beta_j(\tau_1^2 - \tau_2^2) - \lambda_j(x_1 - x_2)\right] \tag{8}$$

where

B_j is a half of variance of A_j given by relation

$$B_j = \frac{1}{2}\int_{-\infty}^{\infty} A_j^2\, g(A_j)\, dA_j$$

β_j is a parameter determining velocity of frequency changes of an acoustic source and

$$\lambda_j = \frac{\gamma_j R}{c} \sin\frac{\Phi}{2}.$$

After substitution of the correlation function of loading (8) into equations (6) the following relations for the variances of displacements have been obtained:

$$\begin{bmatrix} \sigma^2_{uu}(\xi, \varphi, t) \\ \sigma^2_{vv}(\xi, \varphi, t) \\ \sigma^2_{ww}(\xi, \varphi, t) \end{bmatrix} = \frac{4R^4}{(\pi LR\,\varrho h)^2} \sum_{j=1}^{N} \sum_{m,r=1}^{\infty} \sum_{n,s=0}^{\infty} K_j \frac{\lambda_{mn}}{\bar{\omega}_{mn}} \frac{\lambda_{rs}}{\bar{\omega}_{mn}}$$

$$\iint_S \iint_S \begin{bmatrix} \frac{\Phi_{u\,mn}}{G_{w\,mn}} \frac{\Phi_{u\,vs}}{G_{w\,rs}} \cos\frac{m\pi\xi}{l} \cos\frac{r\pi\xi}{l} \cos n(\varphi-\psi_1) \cos s(\varphi-\psi_2) \\ \frac{\Phi_{r\,mn}}{G_{w\,mn}} \frac{\Phi_{v\,rs}}{G_{w\,rs}} \sin\frac{m\pi\xi}{l} \sin\frac{r\pi\xi}{l} \sin n(\varphi-\psi_1) \sin s(\varphi-\psi_2) \\ \sin\frac{m\pi\xi}{l} \sin\frac{r\pi\xi}{l} \cos n(\varphi-\psi_1) \cos s(\varphi-\psi_2) \end{bmatrix}$$

$$\cdot \sin\frac{m\pi x_1}{l} \sin\frac{r\pi x_2}{l} \int_0^t \int_0^t e^{-\varepsilon_{mn}(t-\tau_1)} \sin\bar{\omega}_{mn}(t-\tau_1) \cdot$$

$$\cdot e^{-\varepsilon_{rs}(t-\tau_2)} \sin\bar{\omega}_{rs}(t-\tau_2) \cdot$$

$$\cdot \cos\left[\beta_j(\tau_1^2 - \tau_2^2) - \lambda_j(x_1-x_2)\right] d\tau_1\, d\tau_2\, dx_1\, d\psi_1\, dx_2\, d\psi_2 \,. \qquad (9)$$

The time - integrals may be expressed by a tabelarized probability function with a complex argument or related to it. Denoting a real part $U(z)$ and imaginary part $V(z)$ of the function

$$W(z) = e^{-z^2} \int_0^z e^{x^2}\, dx \,,$$

(where z is a complex number) and introducing these functions in a polar system, after some manipulations we can write the following expressions for variances of displacements

$$\begin{bmatrix} \sigma^2_{uu}(\xi, t) \\ \sigma^2_{vv}(\xi, t) \\ \sigma^2_{ww}(\xi, t) \end{bmatrix} = \frac{R^4 \pi^2}{(\pi L R \varrho h)^2} \sum_{j=1}^{N} \sum_{m,r=1}^{\infty} \frac{K_j}{\beta_j \bar{\omega}_{m0} \bar{\omega}_{r0}} \cdot$$

$$\begin{bmatrix} \dfrac{\Phi_{u\ m0}\ \Phi_{v\ r0}}{G_{w\ m0}\ G_{w\ r0}} \cos\dfrac{m\pi\xi}{l} \cos\dfrac{r\pi\xi}{l} \\ 0 \\ \sin\dfrac{m\pi\xi}{l} \sin\dfrac{r\pi\xi}{l} \end{bmatrix}$$

$$\left\{ C_{m0\ r0}(t)\left[K_m K_r - L_m L_r\right] + D_{m0\ r0}(t)\left[L_m K_r - K_m L_r\right] \right\}, \tag{10}$$

where

$$C_{m0\ r0}(t) = C_{mn\ rs}(t)\Big|_{\substack{n=0\\ s=0}}, \quad D_{m0\ r0}(t) = D_{mn\ rs}(t)\Big|_{\substack{n=0\\ s=0}},$$

$$C_{mn\ rs}(t) = \left[S^+_{(1)mn}(t) - S^-_{(2)mn}(t)\right]\left[S^+_{(1)\ rs}(t) - S^-_{(2)\ rs}(t)\right] +$$

$$+ \left[T^+_{(1)\ rs}(t) - T^-_{(2)rs}(t)\right]\left[T^+_{(1)mn}(t) - T^-_{(2)mn}(t)\right],$$

$$D_{mn\ rs}(t) = \left[S^+_{(1)mn}(t) - S^-_{(2)mn}(t)\right]\left[T^+_{(1)rs}(t) - T^-_{(2)rs}(t)\right] -$$

$$- \left[S^+_{(1)rs}(t) - S^-_{(2)rs}(t)\right]\left[T^+_{(1)mn}(t) - T^-_{(2)mn}(t)\right].$$

and

$$S^{\pm}_{(\cdot)mn,rs}(t) = U(\varrho_{(\cdot)mn,rs}(t),\ \Theta_{(\cdot)mn,rs}(t)) - \exp(-\varepsilon_{mn,rs}\ t)\cdot$$

$$\Big[U(\varrho_{(\cdot)mn,rs}(0),\ \Theta_{(\cdot)mn,rs}(0)),\ \cos(\beta_j\ t^2 \pm \bar{\omega}_{mn,rs}\ t) +$$

$$V(\varrho_{(\cdot)mn,rs}(0),\ \Theta_{(\cdot)mn,rs}(0)),\ \sin(\beta_j\ t^2 \pm \bar{\omega}_{mn,rs}\ t)\Big],$$

$$T^{\pm}_{(\cdot)mn,rs}(t) = V(\varrho_{(\cdot)mn,rs}(t),\quad \Theta_{(\cdot)mn,rs}(t)) - \exp(-\varepsilon_{mn,rs}\ ).$$

$$\Big[U(\varrho_{(\cdot)mn,rs}(0),\quad \Theta_{(\cdot)mn,rs}(0))\ \sin(\beta_j\ t^2 \pm \overline{\omega}_{mn,rs}\ t) -$$

$$- V(\varrho_{(\cdot)mn,rs}(0),\quad \Theta_{(\cdot)mn,rs}(0))\ \cos(\beta_j\ t^2 \pm \overline{\omega}_{mn,rs}\ t)\Big],$$

$$\varrho_{(1)mn,rs}(t) = \frac{1}{2}\left[\frac{(2\ \beta_j t + \overline{\omega}_{mn,rs})^2 + \varepsilon^2_{mn,rs}}{\beta_j}\right]^{1/2},$$

$$\varrho_{(2)mn,rs}(t) = \frac{1}{2}\left[\frac{(2\ \beta_j\ t - \overline{\omega}_{mn,rs})^2 + \varepsilon^2_{mn,rs}}{\beta_j}\right]^{1/2},$$

$$\Theta_{(1)mn,rs}(t) = \arctan\ \frac{2\ \beta_j t + \overline{\omega}_{mn,rs}}{\varepsilon_{mn,rs}} - \frac{\pi}{4},$$

$$\Theta_{(2)mn,rs}(t) = \arctan\ \frac{2\ \beta_j t - \overline{\omega}_{mn,rs}}{\varepsilon_{mn,rs}} - \frac{\pi}{4}.$$

Expressions for $L_{(\cdot)}$ and $K_{(\cdot)}$ take a from

$$L_{(\cdot)} = \frac{\frac{(\cdot)\pi}{l}\ (-1)^{(\cdot)}\ \sin\lambda_j\ l}{(\frac{(\cdot)\pi}{l})^2 - \lambda_j^2},\qquad K_{(\cdot)} = \frac{\frac{(\cdot)\pi}{l}\left[1 - (-1)^{(\cdot)}\cos\lambda_j\ l\right]}{(\frac{(\cdot)\pi}{l})^2 - \lambda_j^2}.$$

After simple modifications the above method may be applied also for the other choice of the boundary conditions and it may be adapted to such continuous systems like beams and plates due to the random excitation with varying frequency.

Numerical Calculations and Results

In order to obtain values of variances for the physical quantities and for avoidance of transmission of the tabelarized function W(z) to computer, the well-known series expansions of this function have been utilized. In this paper expansions in Taylor series for small |z| and asymptotic series for great values of |z| have been used. Using the polar system the series may be written as

for $\varrho < 2$

$$U(\varrho,\Theta) = \sum_{k=0}^{\infty} (-1)^k \frac{2^k \varrho^{2k+1}}{(2k+1)!!} \cos (2k+1)\Theta,$$

$$V(\varrho,\Theta) = \sum_{k=0}^{\infty} (-1)^k \frac{2^k \varrho^{2k+1}}{(2k+1)!!} \sin(2k+1)\Theta$$

and for $\varrho > 2$

$$U(\varrho,\Theta) = \frac{\sqrt{\pi}}{2} e^{-\varrho^2 \cos 2\Theta} \sin(\varrho^2 \sin 2\Theta) + \frac{1}{2\varrho} \cos\Theta +$$

$$+ \sum_{k=2}^{\infty} \frac{(2k-3)!!}{2^k \varrho^{2k-1}} \cos (2k-1)\Theta$$

$$V(\varrho,\Theta) = \frac{\sqrt{\pi}}{2} e^{-\varrho^2 \cos 2\Theta} \cos(\varrho^2 \sin 2\Theta) - \frac{1}{2\varrho} \sin\Theta -$$

$$- \sum_{k=2}^{\infty} \frac{(2k-3)!!}{2^k \varrho^{2k-1}} \sin (2k-1)\Theta.$$

It is to be noted that the asymptotic series are valid in upper complex half-plane i.e. $0 < \Theta < \pi$.
However the properties of functions U i V

$$U(\varrho, -\Theta) = U(\varrho, \Theta) \qquad U(\varrho, \Theta + \pi) = -U(\varrho, \Theta)$$
$$V(\varrho, -\Theta) = -V(\varrho, \Theta) \qquad V(\varrho, \Theta + \pi) = -V(\varrho, \Theta)$$

are giving the possibility for determining those functions on the remaining sector. The following data were adapted for the numerical computations of the variance of radial shell displacement:

$E = 2.10^{11}$ [N/m^2], $R = 1$[m], $L = 3,1415$[m], $\varrho = 7800$[kg/m^3],

$h = 0,02$ [m], $\nu = 0,3$.

It has been assumed that $j = 1$ and the following reduced value of that variance is calculated like that

$$\tilde{\sigma}^2_{ww}(\hat{s}, t) = \sigma^2_{ww}(\hat{s}, t)(\varrho^2 h^2 LR/B_1).$$

The computations are mode for the constant values of $\beta_1 = 1\,[1/s^2]$, $\lambda_1 = 0{,}0021\ [1/m]$ and for a changing damping coefficient $\varepsilon_{mn} = 4;5;7;10\,[1/s]$. The variance of radial displacement versus time and space is illustrated in Fig 2; 3; 4; 5.

It has been observed that for the time $t_m \cong \frac{\bar{\omega}_{m0}}{2\beta_1} \cong \frac{a_{m0}}{2\beta_1}$ maxima of variance level can be stated. These maxima are results of resonance between the transient frequency of excitation and natural frequencies of the system.

Owing to the fact that the first two natural frequencies are nearly egual (i.e. $a_{10}=5063{,}8\,[1/s]$, $a_{20}=5064{,}44\,[1/s]$) for time $t_{1,2}=a_{10},a_{20}/2\beta_1$ single maxima have not been observed but the joint resonance has benn observed.

For the time $t_3 \cong \frac{a_{30}}{2\beta_1}$ $a_{30} = 5071{,}20\,[1/s]$ by damping coefficient $\varepsilon_{mn} = 4;5\ [1/s]$ an influence of the third natural frequency of the shell is observed. This effect is shown in Fig 2 and 3.

For $\varepsilon_{mn} = 7;10\,[1/s]$ effect of excitation of higher frequencies is not observed. The level of variance is falling down with the increase of the damping coefficient. An investigation of the variance of radial displacement has been made also for a very short initial time. From the results obtained (most of which have not been presented here) it is seen in Fig 6 that for this initial time the variance is oscilating. These oscilations of a variance have a diminishing amplitude and they are result of deterministic initial conditions and of the fact that in this case $K_{qq}(\tau_1, \tau_2) = B_1$. It is seen that for a very short initial time similarly as for the systems with one-degree of freedom the continuous systems have vibrations due to a constant deterministic excitation.

REFERENCES

[1] Flügge W.; Statik und Dynamik der Schalen, Springer Verlag, Berlin 1962, Chapter 5.

[2] Goldenveizer A.L.: Theory of Elastic Thin Shells, Gos.Tekh.Lit. Moscow, 1953.

[3] Mangelsdorf C.P.: The Morley - Koiter Equations for Thin-Walled Circular Cylindricall Shells, Part 1, Journal of Applied Mechanics Vol 40, No 4, Trans.ASME Vol. 95. Series E, December 1973, pp. 961-965.

[4] Lewis F.M.: Vibration during Acceleration through a Critial Speed, Trans. ASME, Vol 54, 1932 pp. 253-261.

[5] Filipov A.P.: Vibration of a Linear System Caused by an Acceleration throuhg a Critical Speed, Izv. of Academy of Sciences S.U. No 12, Moscow 1958 (in Russian).

[6] Stronge W.J.; Vibration Due to an excitation with Uniformly Varying Frequency, Journal of Applied Mechanics, Vol. 33, pp.462-463.

[7] Tylikowski A.: Vibration of a Linear System Caused by a Chance Process with Uniformly Varying Frequency, Engineering Transactions, Vol. 17, 2, Warsaw 1969, pp.269-279.

[8] Skalmierski B., Czogała E.: On a Certain Problem of Nonstationary Vibration of Shells Randomly Loaded, Engineering Transactions, Vol 17,2 Warsaw 1969, pp. 219-228.

[9] Skalmierski B., Czogała E.: Visco-elastic Cylindrical Shell Resting on a Foundation Visco-elastic in a Single Direction. Engineering Transactions, Vol 14,4, Warsaw 1966 pp. 609-627.

СЛУЧАЙНЫЕ КОЛЕБАНИЯ ЦИЛИНДРИЧЕСКОЙ ОБОЛОЧКИ, ВОЗБУЖДАЕМЫЕ ПЕРЕМЕННОЙ ЧАСТОТОЙ

Р е з ю м е

В работе дан анализ проблемы случайных колебаний цилиндрической оболочки законченной длины. За нагрузку системы принято радиальное аксиально-симметричное поле с переменной частотой. Аналитически и численно определено нестационарную реакцию в виде квадрата дисперсии перемещений оболочки. Результатом расчётов является резонанс квадратов дисперсии радиальных перемещений наблюдаемых в некоторых определённых диапазонах времени.

DRGANIA PRZYPADKOWE POWŁOKI CYLINDRYCZNEJ
Z POBUDZENIEM O ZMIENNEJ CZĘSTOTLIWOŚCI

S t r e s z c z e n i e

W pracy przeanalizowano problem drgań przypadkowych powłoki cylindrycznej o skończonej długości. Obciążenie układu przyjęto jako promieniowe osiowo-symetryczne pole o zmiennej częstotliwości.

Wyznaczono analitycznie i numerycznie niestacjonarną reakcję w postaci wariancji przemieszczeń powłoki.

Rezultatem obliczeń jest obserwacja w pewnych przedziałach czasu poziomów rezonansowych wariancji przemieszczeń promieniowych.

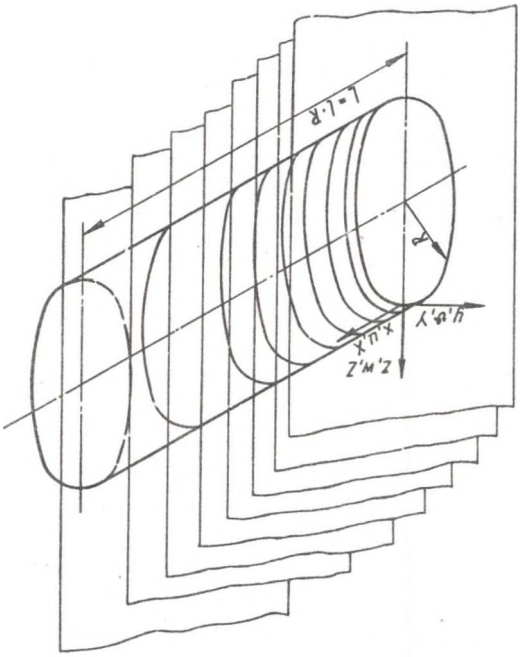

Fig. 1

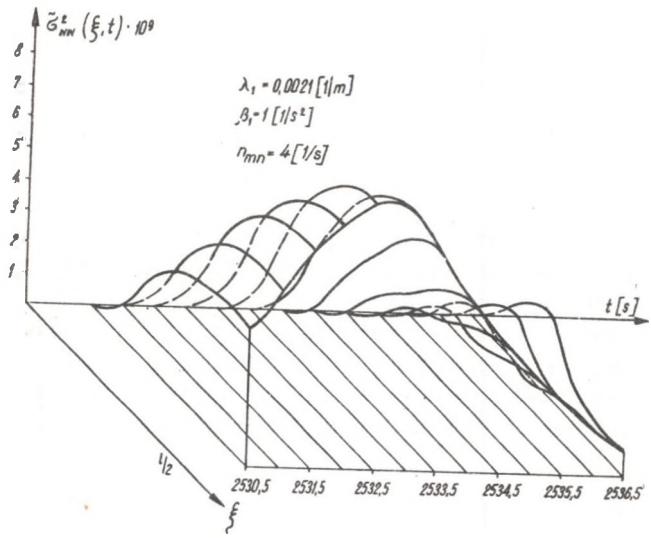
$\tilde{\sigma}^t_{nn}(\xi,t)\cdot 10^9$
8
7
6
5
4
3
2
1
$\lambda_1 = 0{,}0021\,[1/m]$
$\beta_1 = 1\,[1/s^2]$
$n_{mn} = 4\,[1/s]$
t [s]
1/2
2530,5
2531,5
2532,5
2533,5
2534,5
2535,5
2536,5
ξ

Fig. 2

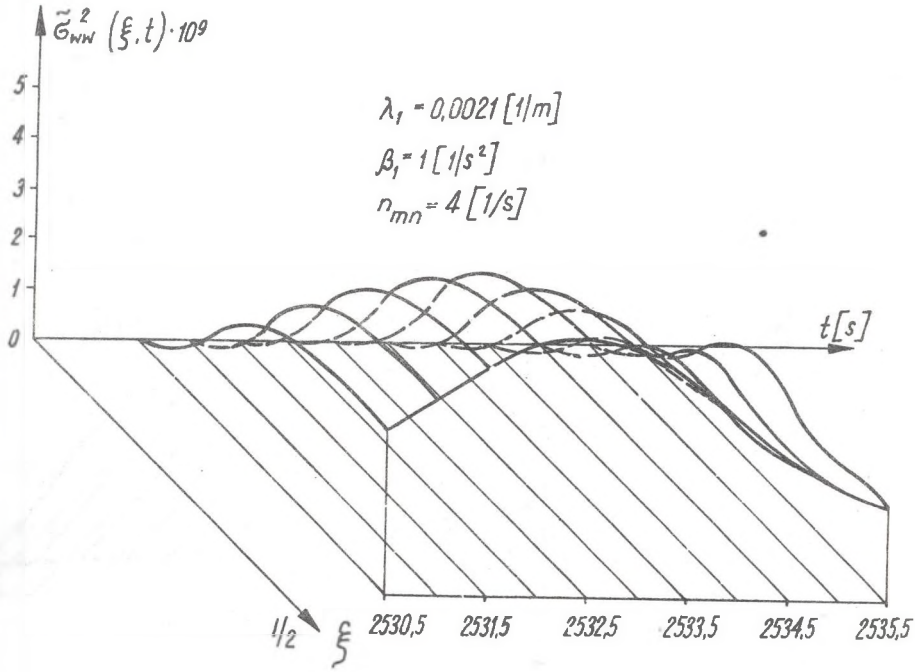
$\tilde{\sigma}^2_{WW}(\xi,t)\cdot 10^9$
5
4
3
2
1
0
$\lambda_1 = 0{,}0021\,[1/m]$
$\beta_1 = 1\,[1/s^2]$
$n_{mn} = 4\,[1/s]$
t[s]
l/2
ξ
2530,5
2531,5
2532,5
2533,5
2534,5
2535,5

Fig. 3

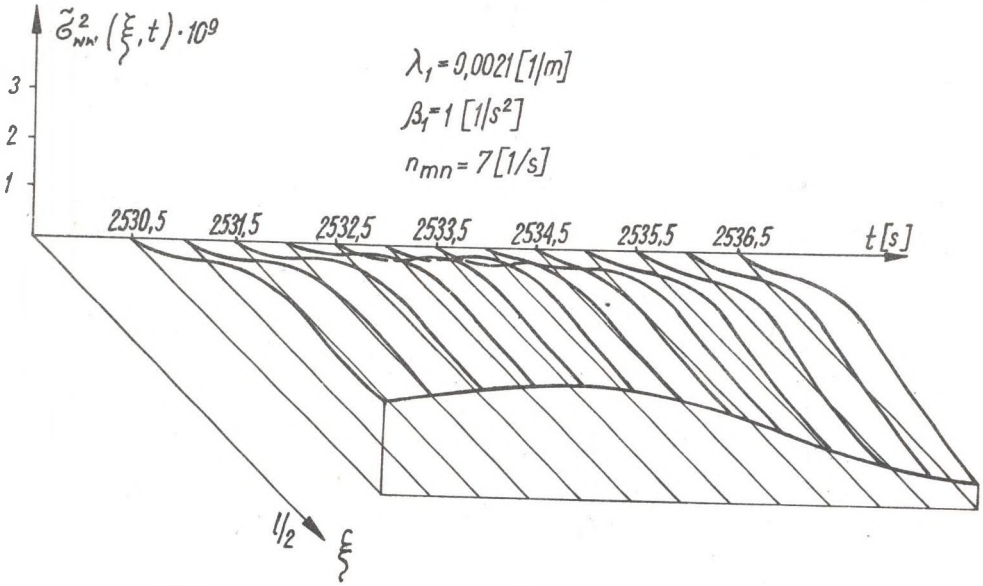
$\tilde{\sigma}^2_{WW}(\xi,t)\cdot 10^9$
3
2
1
$\lambda_1 = 0{,}0021\,[1/m]$
$\beta_1 = 1\,[1/s^2]$
$n_{mn} = 7\,[1/s]$
2530,5
2531,5
2532,5
2533,5
2534,5
2535,5
2536,5
t[s]
l/2
ξ

Fig. 4

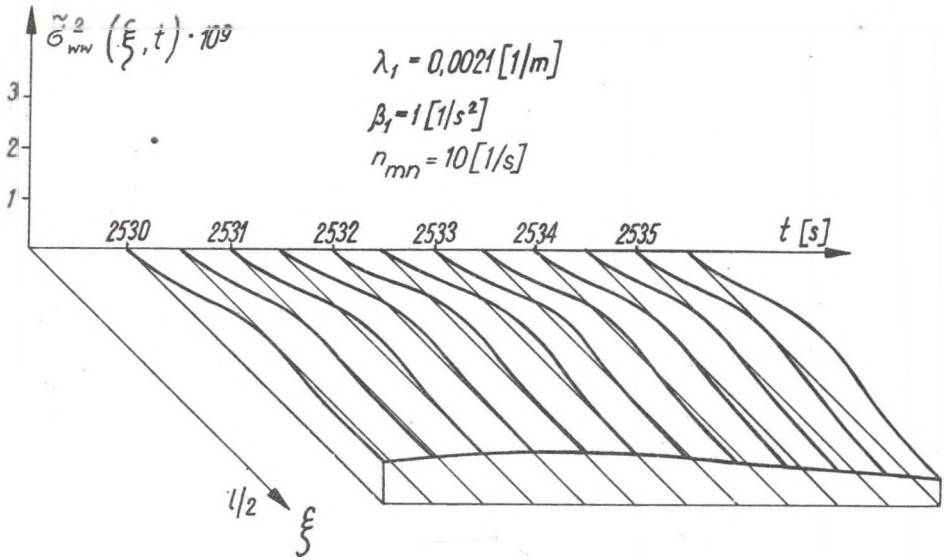
$\tilde{\sigma}^2_{ww}(\xi, t)\cdot 10^9$
$\lambda_1 = 0{,}0021\,[1/m]$
$\beta_1 = 1\,[1/s^2]$
$n_{mn} = 10\,[1/s]$
3
2
1
2530
2531
2532
2533
2534
2535
t [s]
l/2
ξ

Fig. 5

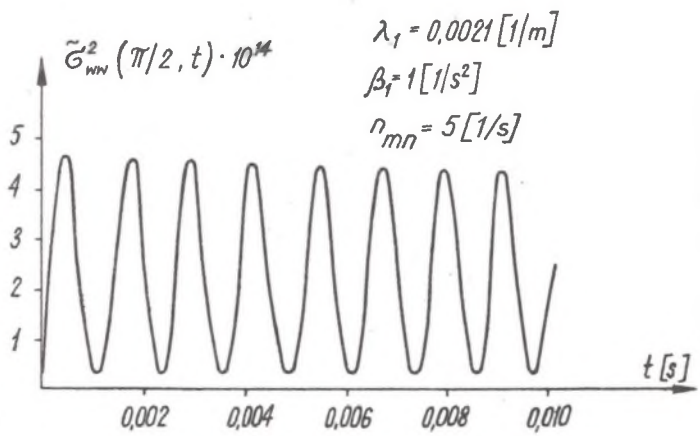
$\tilde{\sigma}^2_{ww}(\pi/2, t)\cdot 10^{14}$
$\lambda_1 = 0{,}0021\,[1/m]$
$\beta_1 = 1\,[1/s^2]$
$n_{mn} = 5\,[1/s]$
5
4
3
2
1
t [s]
0,002
0,004
0,006
0,008
0,010

Fig. 6