ZESZYTY NAUKOWE POLITECHNIKI ŚLĄSKIEJ 1997
Seria: MATEMATYKA-FIZYKA z. 82 Nr kol. 1360

Zygmunt KLESZCZEWSKI

ELLIPTIC POLARIZATION OF ACOUSTIC WAVES IN CRYSTALS

Summary. In this work we present experimental studies of elliptic polarization of acoustic waves in cryslals of lithium tantalate and godolinium-gallium garnet. The elliptically polarized waves has been obtained as a result of superposition of two transverse waves with the mutual perpendicular polarizations and propagating with a little diffrent velocities. The change of the velocity of interacting waves has been obtained by the study of the wave propagation in the directions somewhat different than the pure-mode ones or by location of the crystal in the electric field.

ELIPTYCZNA POLARYZACJA FAL AKUSTYCZNYCH W KRYSZTAŁACH

Streszczenie. W pracy przedstawiono badania eksperymentalne eliptycznej polaryzacji fal akustycznych w kryształach tantalu litu i granatu gadolinowo-galowego. Polaryzację eliptyczną otrzymano jako wynik superpozycji dwóch fal poprzecznych o prostopadłych polaryzacjach i propagujących się z nieco różnymi prędkościami. Zmiany prędkości oddziałujących fal uzyskano także umieszczając badane kryształy w polu elektrycznym.

1. Introduction

Investigation of polarization effects can be a source of many interesting information on linear and nonlinear acoustics of solid state. One can analyse propagation of acoustic wave in crystallographic directions which are close to the pure mode ones. There is also a relatively simple method of studying an external field influence on the acoustic properties of crystals [1].

The aim of this work were experimental studies of elliptic polarization of acoustic waves in crystals and analysis of possibilities of using this phenomenon to examination of the acoustic properties of crystals. The elliptical polarization was obtained due to the appropriate directions of propagation of acoustic waves. In the case of the piezoelectic crystal this effects was obtained also by location of the crystal in the external electric field. The experiment was performed by means of the acoustooptic method.

2. Theoretical analysis

We know that three elastic waves can propagate in crystals: two transverse and one longitudinal. The velocities of these waves are usually different and depend on the direction of the wave propagation. However, we can find such directions in crystals that transverse acoustic waves propagate along them with the same phase velocity. For a large number of crystals such direction, called degenerated, is the [001] one. If the direction of propagation differs a little from the degenerated one, these waves with the mutually perpendicular polarization propagate with a little different velocities.

Let us consider this problem in the crystals of the cubic system. The propagation velocity and acoustic wave polarization in crystals can be found from the Christoffel equation [2]

$$|\Gamma_{ik} - \rho v^2 \delta_{ik}| = 0, \tag{1}$$

where $\Gamma_{ik} = c_{ijkl}\kappa_j\kappa_l$, c_{ijkl} are the elastic constants of the second order, and κ_j, κ_l are the components of the unitary vector in the wave propagation direction, δ_{ik} - Kronecker delta. Let us assume that $\kappa_1 = \sin\Theta$, $\kappa_2 = 0$, $\kappa_3 = \cos\Theta$ (fig. 1), where Θ is the angle between the wave propagation direction and the [001] direction.

Then, for the crystallographic system previously assumed, the components of the Γ_{ik} tensor have the form

$$\Gamma_{11} = c_{11}\sin^2\Theta + c_{44}\cos^2\Theta, \tag{2}$$

$$\Gamma_{13} = \Gamma_{31} = (c_{12} + c_{44})\sin\Theta\cos\Theta, \tag{3}$$

$$\Gamma_{22} = c_{44}, \tag{4}$$

$$\Gamma_{33} = c_{11}\cos^2\Theta + c_{44}\sin^2\Theta, \tag{5}$$

$$\Gamma_{23} = \Gamma_{32} = 0. \tag{6}$$

For the small deflection from the degenerated direction we can assume that $\sin^2\Theta = \Theta^2$, $\cos^2\Theta = 1 - \Theta^2$. Then, by using the formula (1) we can calculate the propagation

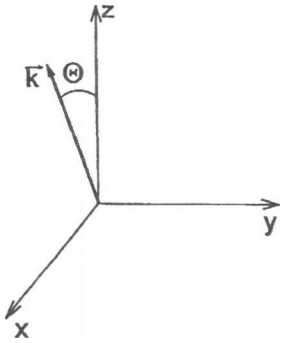

Rys. 1. Kierunek propagacji fali
Fig. 1. Wave propagation directions

velocity of the transverse v_T and longitudinal waves v_L. These velocities are expressed by the following formulas

$$v_{T_2} = \sqrt{\frac{c_{44}}{\rho}}, \qquad \text{polarization [010]}, \tag{7}$$

$$v_{T_1} = \sqrt{\frac{1}{\rho}\left(c_{44} + \frac{(c_{11}+c_{44})^2 - (c_{12}+c_{44})^2}{(c_{11}-c_{44})}\Theta^2\right)} \qquad \text{polarization [100]}, \tag{8}$$

$$v_L = \sqrt{\frac{1}{\rho}\left(c_{11} + \frac{(c_{11}+c_{44})^2 - (c_{12}+c_{44})^2}{(c_{11}-c_{44})}\Theta^2\right)}. \tag{9}$$

There, the relative changes in velocity of the longitudinal and transverse waves of [100] polarization are equal

$$\frac{\Delta v_L}{v_L} = -\frac{(c_{11}-c_{12}-2c_{44})(c_{11}+c_{12})}{2c_{11}(c_{11}-c_{44})}\Theta^2, \tag{10}$$

$$\frac{\Delta v_T}{v_T} = \frac{(c_{11}-c_{12}-2c_{44})(c_{11}+c_{12})}{2c_{44}(c_{11}-c_{44})}\Theta^2. \tag{11}$$

We obtain two transverse waves with a little different velocities.

Let us assume that in the crystal we generate the transverse wave propagating in the direction assumed above and at angle α to the [100] direction (fig. 2).

The vector of the wave displacement at the point of wave generation can be described by the formulas

$$u_{0x} = u_0 \sin\alpha_0, \tag{12}$$

$$u_{0y} = u_0 \cos\alpha_0. \tag{13}$$

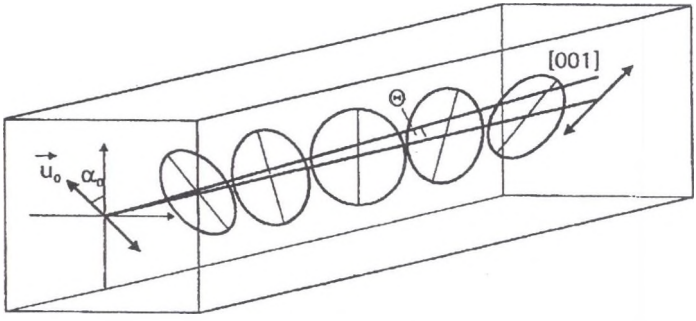

Rys. 2. Zmiana polaryzacji poprzecznej fali akustycznej propagującej się pod kątem Θ względem kierunku zdegenerowanego
Fig. 2. The change of polarization of the transverse acoustic wave during propagation at an angle Θ to the degenerated direction

However, at a distance l from the transducer the displacement is equal

$$u_x(l) = u_0 \exp\left(\frac{i\omega l}{v_T + \Delta v_T}\right), \tag{14}$$

$$u_y(l) = u_0 \exp\left(\frac{i\omega l}{v_T}\right). \tag{15}$$

Between these two components a certain phase difference appears, because the propagation of waves polarized in the [100] and [010] directions are different. It means that the wave polarization changes. The wave polarized linearly becomes polarized elliptically, circularly, then again linearly, etc. This effect is presented in fig. 2. The phase difference is equal

$$\Delta\varphi = \frac{\omega l}{v_T} - \frac{\omega l}{v_T + \Delta v_T} = \frac{\omega l}{v_T^2}\Delta v_T. \tag{16}$$

For $\Delta\varphi = k\pi$ we obtain the linear polarization, and for $\Delta\varphi = \frac{\pi}{2} + k\pi$ the circular polarization. Thus, we can notice that the oriented plate of the thickness d which fulfils the following condition

$$d = \frac{\pi v_T^2}{2\omega\Delta v} \tag{17}$$

acts as a quarter-wave plate in optics. The analogous consideration can be carried out for the other crystals. In particular, for the crystals of the 3m class which were studied, the changes in the components of the transverse wave are equal

$$\frac{\Delta v_{T_1}}{v_{T_1}} = -\frac{c_{14}}{c_{44}}\Theta, \tag{18}$$

$$\frac{\Delta v_{T_2}}{v_{T_2}} = -\frac{c_{14}}{c_{44}}\Theta. \tag{19}$$

Then the differences of velocities and phases are equal respectively:

$$\Delta v = 2\Theta \frac{c_{14}}{c_{44}} v_T, \tag{20}$$

$$\Delta\varphi = \frac{\omega l}{v_T^2} \Delta v = \frac{\omega l}{v_T} 2\Theta \frac{c_{14}}{c_{44}}, \tag{21}$$

where $v_T = \sqrt{\frac{c_{44}}{\rho}}$ is the wave velocity in the [001] direction. The discussed reason of the wave velocity difference and, as a result, the elliptic polarization of the acoustic wave, is often called geometrical or linear one.

Another cause of the removal of degeneration in the given direction in the crystal can be such external factors as an electric field, pressure, etc. In these cases we can say about nonlinear reason of the wave velocity difference and the elliptic polarization, because this effect is conditioned by the higher order material constants which describe the nonlinear effects.

In the case of the external electric field the motion equation has the form [1]

$$\frac{\partial^2 u_i}{\partial t^2} = \frac{\partial}{\partial x_j}\left[\frac{\partial u_k}{\partial x_l}\left(c_{ijkl} + \frac{1}{2}\frac{\partial u_q}{\partial x_r} c_{ijklqr} - e_{pijkl} E_p\right) - \left(e_{nij} + \frac{1}{2}\frac{\partial u_q}{\partial x_r} e_{nijqr}\right) E_n\right], \tag{22}$$

where c_{ijklqr} are the third order elastic constants and e_{nij}, e_{nijqr} are the linear and nonlinear piezoelectric constants respectively, E_m are the components of the electric field.

Solving the Christoffel equation we can determine the acoustic wave propagation velocity in the separate crystallographic directions and the influence of the electric field on the wave velocity. We can also study the elastic and piezoelectric nonlinear effects, and then determine the higher order material constants.

In the cases of the 3m class crystals the relative changes in velocity of transverse acoustic waves of the different polarization which propagate in the [001] direction, can be expressed by the formula

$$\frac{\Delta v_{T_1}}{v_{T_1} E_2} = -\frac{\Delta v_{T_1}}{v_{T_1} E_2} = \frac{1}{2c_{44}}\left[2d_{22}c_{44} + e_{145} + d_{22}\left(c_{155} - c_{144}\right) + d_{15}c_{444}\right], \tag{23}$$

$$\frac{\Delta v_{T_1}}{v_{T_1} E_3} = \frac{\Delta v_{T_1}}{v_{T_1} E_3} = \frac{1}{2c_{44}}\left[e_{345} - 2d_{31}c_{44} - d_{31}\left(c_{155} + c_{144}\right) - d_{33}c_{344}\right], \tag{24}$$

where d_{ij} are the components of the piezoelectric strain coefficient.

From the expression (23) and (24) it results that this effect appears only in the piezoelectric crystals. From the measurements of the changes in velocity we can obtain information about the higher order material constants.

3. Experimental studies

Experiments were performed by using the Bragg acoustooptic interaction. It is known that the intensity of diffracted light on the acoustic wave in the crystal is expressed by the formula [3]

$$\frac{I}{I_0} \sim \left(p_{ijkl}\,\alpha_i\,\beta_j\,\kappa_k\,\gamma_l\right)^2, \tag{25}$$

where p_{ijkl} are the components of the photoelastic constant tensor, α_i, β_j are the components of the unitary vector which defines polarization of the light incident and deflected, κ_k, γ_l are the components of the unitary vector in the direction of propagation and polarization of the acoustic wave.

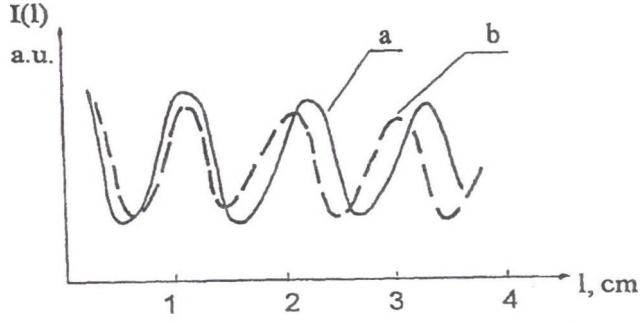

Rys. 3. Zależność natężenia ugiętego światła od odległości od przetwornika dla $LiTaO_3$; a) $E = 0$, b) $E = E_1 = 8000$ V/m, $f = 340$ MHz

Fig. 3. Dependence of intensity of the diffracted light on the distance from the transducer in $LiTaO_3$; a) $E = 0$, b) $E = E_1 = 8000$ V/m, $f = 340$ MHz

From the equation (25) it results that for the crystal with the established p_{ijkl} tensor, the light diffraction is possible only for a certain polarization of incident and deflected light and for a certain polarization and direction of the acoustic wave propagation. The change in the plane of the acoustic wave polarization causes the change in the deflected light intensity.

From these considerations we can derive an idea of using the Bragg diffraction to investigate the polarization effects accompanying the acoustic wave propagation. We have shown the changes in the direction of the transverse wave polarization in the analysed phenomena. This means a change in the deflected light intensity. These changes appear periodically with a period corresponding to a phase change $\Delta\varphi = \pi$. Thus, stabilizing the polarization plane and moving the laser beam along the propagation direction of the acoustic wave, from the measurement of $I(l)$, that is $I(\Delta\varphi)$, we can obtain $\Delta\varphi$. It allows, as a result, to study the crystal orientation or the nonlinear effects.

The experimental set-up has been described in details in the work [4].

The discussed polarization effects were studied in lithium tantalate and gadolinium-gallium garnet. The dimensions of the crystals were of 50 × 5 × 5 mm and 40 × 5 × 5 mm, respectively. The crystals were cut in such a way that the [001] direction was at an angle $\Theta = 0,5°$ ($LiTaO_3$) and $\Theta = 3°$ (GGG) with respect to their longer edges.

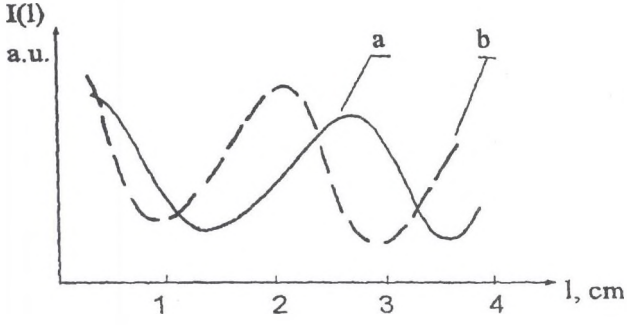

Rys. 4. Zależność natężenia ugiętego światła od odległości od przetwornika dla GGG; a) $f = 310$ MHz, b) $f = 470$ MHz

Fig. 4. Dependence of intensity of the diffracted light on the distance from the transducer in GGG; a) $f = 310$ MHz, b) $f = 470$ MHz

The transverse acoustic waves were generated by the transducer of the X-cut $LiNbO_3$ which was adhesively connected with the investigated samples. We chose such orientation of the transduces that the initial was about 45°. A wave frequency was from 200 to 500 MHz in different experiments. The generated acoustic field was probed by the properly focused laser beam moved along the longer edge of the crystal. In the case of the GGG crystal the measurements were performed for two frequencies: 310 and 470 MHz, whereas in the case of $LiTaO_3$ for a frequency of 340 MHz with the field strength $E = 0$ and $E = 8 \cdot 10^5$ V/m. The measurement of the deflected light intensity versus the field strength at a fixed point was also carried out. The results of the measurements are presented in fig. 3–5. From these measurements we can determine the distance l corresponding to the phase change of $\Delta\varphi = \pi$, and then calculate the angle Θ. The obtained experimental results are in a very good agreement with the theoretical ones. We calculated also the relative change of velocity due to electric field $\Delta_E = \frac{\Delta v}{vE}$. The results are presented in table 1.

The knowledge of the Δ_E constant permits to determine the elastic and piezoelectric constants in the nonlinear range, that is important for the investigation of unharmonic properties of the crystal net, dispersion and interactions of acoustic waves.

Table 1

Constant Δ_E for $LiTaO_3$

κ_l	γ_k	E_m	Δ_E, 10^{-10} mV^{-1}
[001]	[100]	[010]	1,5
[001]	[010]	[010]	−1,5
[001]	[100]	[001]	2

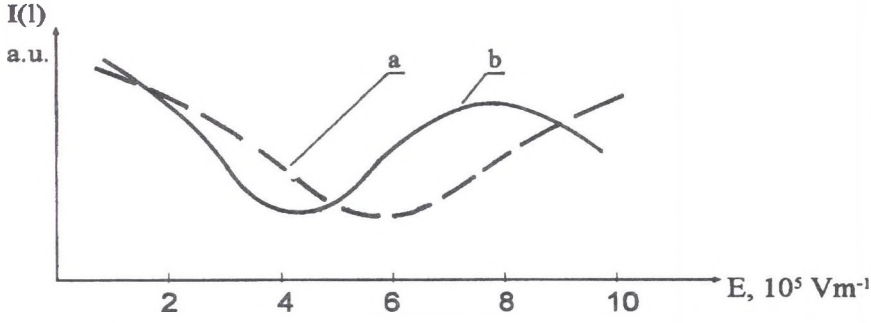

Rys. 5. Zależność natężenia ugiętego światła od natężenia pola elektrycznego, $l = 3$ cm; a) $f = 340$ MHz, b) $f = 480$ MHz

Fig. 5. Dependence of intensity of the diffracted light on the intensity of the electric field, $l = 3$ cm; a) $f = 340$ MHz, b) $f = 480$ MHz

4. Conclusion

The elliptic polarization of acoustic waves in a crystal have been studied by using the laser light diffraction on the transverse acoustic wave. The measurements have been carried out in two cases, studying the propagations in the direction approximate the degeneration directions and putting the piezoelectric crystal in the external electric field.

It seems that the latter case is very interesting because it allows the analysis of elastic and piezoelectric nonlinear effects. The presented method is relatively accurate and complementary to other methods in solid state acoustics.

References

[1] В. Лямов, *Поляризационные эффекты и анизотропные взаимодействия акустических волн в кристаллах,* Издательство Моск. Ун-та, Москва 1983.

[2] B. A. Auld, *Acoustic Fields and Waves in Solids,* J. Wiley & Sons, New York 1973.

[3] V. Mason, *Physical Acoustic* vol **7**, Academic Press 1970.

[4] Z. Kleszczewski, *Making use of Bragg's diffraction for investigations of the acoustic activity of bismuth-germanium oxide,* Archives of Acoustic **15**, **3-4** (1990), 367-374.

Recenzent: Mikołaj Łobowski

Instytut Fizyki
Politechnika Śląska
ul. Krzywoustego 2
44-100 Gliwice

Streszczenie

W pracy przedstawiono rozważania teoretyczne i wyniki badań eksperymentalnych oddziaływania poprzecznych fal akustycznych w kryształach.

Część pierwsza pracy zawiera analizę teoretyczną problemu. Rozważono propagację poprzecznej fali akustycznej w kierunku bliskim osi krystalograficznej i wykazano, że w takim przypadku występują dwie fale o wzajemnie prostopadłych polaryzacjach i nieco różniące się prędkościami. Podobny efekt uzyskujemy umieszczając kryształ w zewnętrznym polu elektrycznym.

Badania eksperymentalne przeprowadzono w kryształach tantalanu litu i granatu gadolinowo-galowego. Metoda pomiarowa wykorzystywała dyfrakcję typu Bragga światła laserowego na fali akustycznej. Dokonując pomiaru natężenia ugiętego światła w funkcji odległości od przetwornika stwierdzono okresowe zmiany natężenia ugiętego światła, co jest wynikiem zmiany płaszczyzny polaryzacji poprzecznej fali akustycznej. Wyznaczając okres tych zmian obliczono kąt między kierunkiem propagacji a osią krystalograficzną.

Podobne pomiary przeprowadzono umieszczając kryształ w zewnętrznym polu elektrycznym. Pole to zmienia prędkość jednej z fal poprzecznych. Pomiary zmian prędkości umożliwiają wyliczanie nieliniowych stałych sprężystych i piezoelektrycznych. Jednak

efektywne wyznaczenie tych stałych jest trudne ze względu na konieczność wykonania bardzo dużej liczby pomiarów w różnych kierunkach krystalograficznych. W pracy badania przeprowadzono dla jednego kierunku, stwierdzając występowanie efektu i użyteczność metod akustooptycznych do badania omawianych zjawisk.