TRANSPORT PROBLEMS 2011
PROBLEMY TRANSPORTU Volume 6 Issue 2

stabilizer bar, cold roll forming

Adam-Markus WITTEK*, Hans-Christian RICHTER
ThyssenKrupp Bilstein Suspension GmbH
Oeger St. 85, 58095 Hagen, Germany
Bogusław ŁAZARZ
Silesian University of Technology, Faculty of Transport
Krasińskiego St. 8, 40-019 Katowice, Poland
**Corresponding author*. E-mail: adam.wittek@thyssenkrupp.com

STABILIZER BARS: Part 3. PRODUCTION METHODS

Summary. The article outlines the methods of stabilizer bar production as well as selected issues concerning the theory of cold roll forming. A proper construction and the selection of parameters are fundamental factors influencing the selection of a suitable production process. The selection of the manufacturing process has a fundamental impact on the quality and durability of the stabilizer bars.

STABILIZATORY SAMOCHODOWE: Część 3. METODY PRODUKCYJNE

Streszczenie. W artykule przedstawiono metody produkcyjne stabilizatorów samochodowych oraz wybrane zagadnienia z teorii gięcia profili. Prawidłowa konstrukcja i właściwy dobór parametrów są podstawowymi czynnikami, które mają wpływ na wybranie odpowiedniej technologii produkcyjnej. Trafne określenie technologii wytwarzania ma zasadniczy wpływ na jakość i trwałość stabilizatorów.

1. INTRODUCTION

While torsion bar springs at the end of prefabrication already have their final form and are hardened and tempered, the stabilizer bars often have to be bent in partly difficult shapes before the hardening process takes place. With the introduction of stabilizer bars in the 1930s, bending of these components was performed by targeted heating of planned bending points successively. Most commonly, two workmen worked together. One heated the point using a welding torch and the other drew the part, often with support, through a longer, tubular lever around an appropriate molded part. Shape forming began at the innermost bending of each side by turns. In the process, the simple molded bodies stuck in a horizontally lying steel plate with appropriate mounting holes for the molded part pins. The horizontal steel plate, which was situated approximately at the working height of the workmen, was given eventually the name „bending table“. After the production lines had come also in the stabilizer bar manufacturing, these bending tables were put mostly vertically while retaining the name and were furnished with numerous hydraulic cylinders for the bending tools (fig 1, 2) [3, 9].

The hot bended car stabilizer bars up to about 30 mm diameter got a separate bending table each, while the smaller batches of truck stabilizer bars, which had a diameter between 35 mm and 80 mm, were bent on a common bending table (fig. 3) [2, 3] with individually fitted tools. In case of car stabilizer bars, good fixing sufficed for correct positioning of the ends, while in case of the massive eyes of heavy truck stabilizer bars after removal from the bending table and before dipping into hardening oil a truing operation was performed [12].

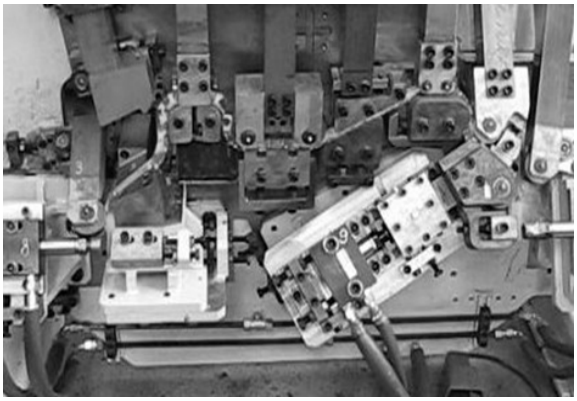

Fig. 1. Bending machines for hot extrusion
Rys. 1. Maszyny do gięcia stabilizatorów na gorąco

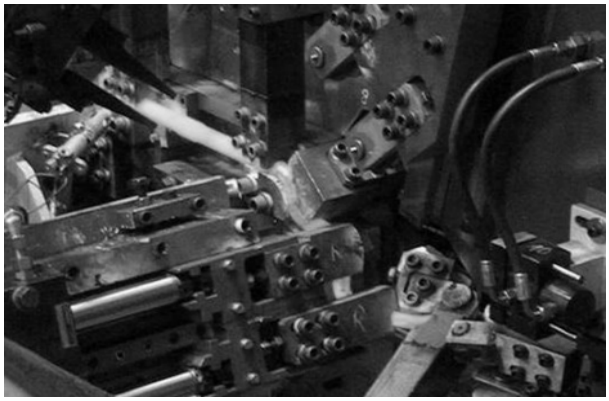

Fig. 2. Bending machines for hot extrusion
Rys. 2. Maszyny do gięcia stabilizatorów na gorąco

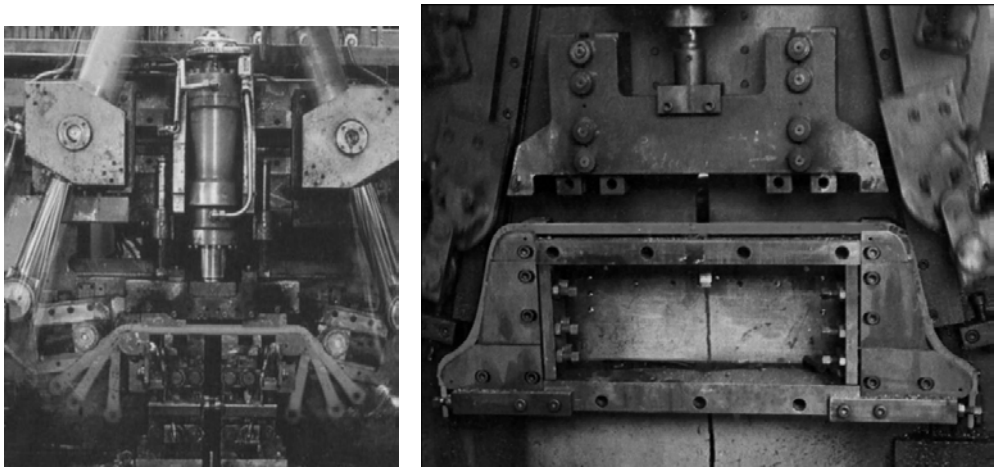

Fig. 3. Heavy bending tables for truck stabilizer bars
Rys. 3.Ciężkie stoły do gięcia stabilizatorów do samochodów ciężarowych

Thin and tubular car stabilizer bars of hardened and tempered material were also bent cold (fig. 4).

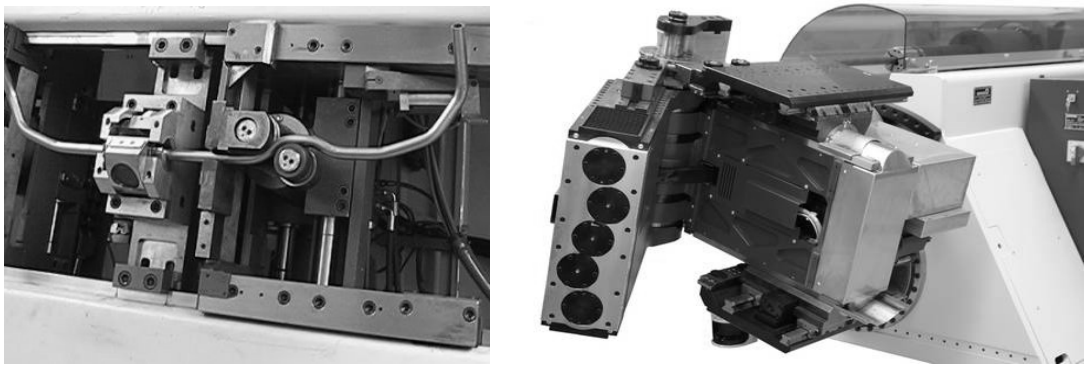

Fig. 4. Cold bending machines for car stabilizer bars
Rys. 4. Automaty do gięcia stabilizatorów na zimno

Before bending and after heating the ends, the stabilizer bars with eyes are automatically forged on, deflashed, punched and calibrated on upset forging machines. Mechanical processing of arm ends may take place before or after shaping.

Bar spring elements, i.e. torsion bar springs and stabilizer bars were processed after hardening and tempering similar to coil springs, but because of the unhindered twistability the torsion bars were cold set, while in–plant setting was naturally not required in case of alternately stressed stabilizer bars. Truing for straightness in case of bar spring elements and for shape accuracy in case of stabilizer bars (fig. 5) was added instead. In case of large–batch production, the mountability of a stabilizer bar is checked by means of a master gauge (fig. 6). Already during the preparation of the production drawing of a stabilizer bar it is important to keep designing of such a gauge in mind [3, 9].

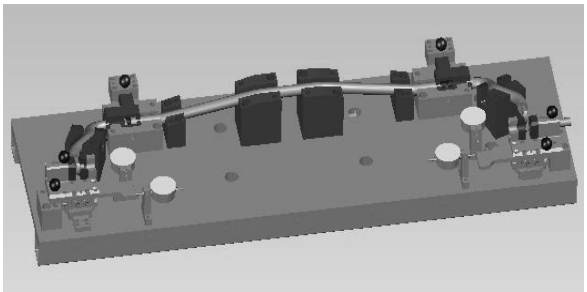

Fig. 5. Straightening gauge
Rys. 5. Oprzyrządowania do prostowania i korekcji kształtu stabilizatora

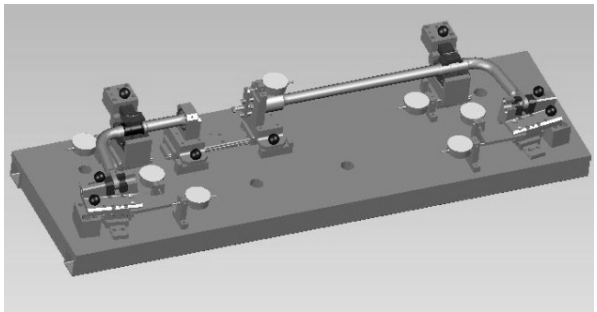

Fig. 6. Master gauge
Rys. 6. Oprzyrządowanie do kontroli formy i geometrii stabilizatora

2. BENDING OF BARS AND TUBES – FORMING

According to DIN 8586, forming by bending is forming of a solid body, where the plastic state of the material in the deformed zone is effected generally by a bending moment. This is caused by tensile or compression load applied from outside or by torsional moments. As a result of the bending process changes the angular position of one part of the workpiece to another. A distinction is made between bending around straight and curved axes and bending with linear and rotary tool motion. Initial shapes of bent components and semi–finished parts are sheets, strips, wires, rods, profile bars and tubes [12, 14].

The classical bending theory takes as the starting point the notion of a neutral fiber or non–stretched layer which should lie in the middle of the profile cross–section and in which no longitudinal stresses are acting.

However, this hypothesis applies only to $r_i/s \geq 50$, while in case of the most bending processes ratios in the range of $r_i/s \leq 50$, apply (r_i – inside bending radii, s – profile thickness/bar diameter). In this case the non-stretched fiber is no longer situated in the center of the cross-section, but with increasing bending radius is shifting inwards (fig. 7).

As a result of stretching, flattening in the outer fiber (outer radius) occurs in such a way that the outer radius of curvature in the middle of the bend is greater than in lateral areas of the curvature. The inner fiber is usually subject to compression [8].

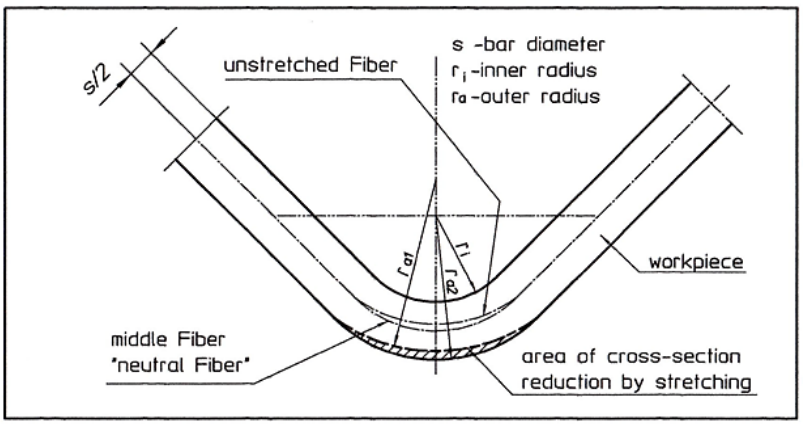

Fig. 7. Bending zone of workpieces with a bending angle of 90°
Rys. 7. Strefa gięcia profili przy kącie wynoszącym 90°

2.1. Layer model – determining the deformations [7, 12, 13]

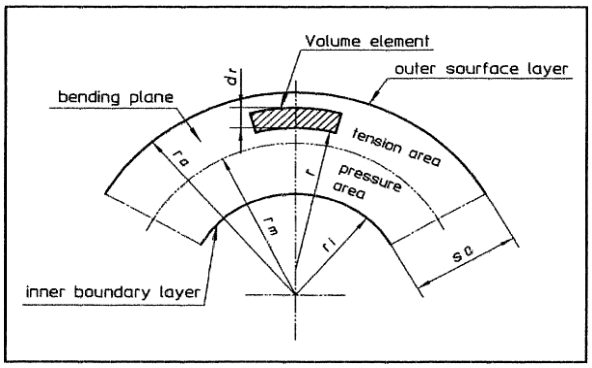

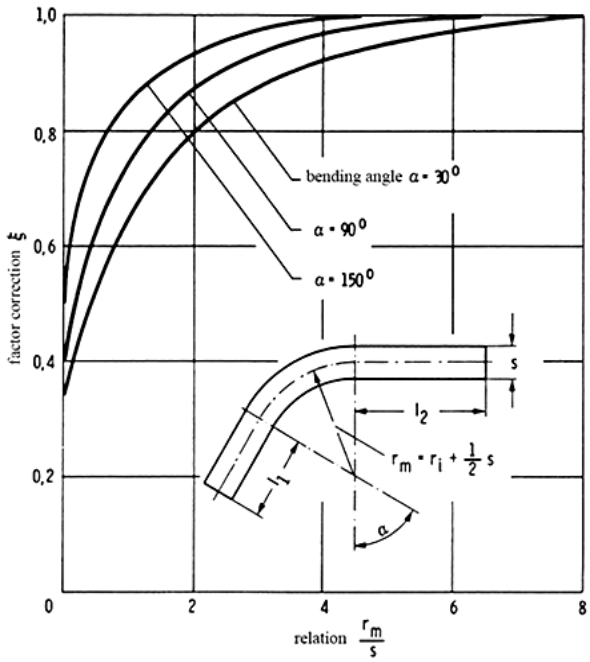

Fig. 8. Layer model [12]
Rys. 8. Model warstwowy [12]

Fig. 9. Determination of the correction factor ξ (s_o=s) [13]
Rys. 9. Wyznaczanie współczynnika korekcji ξ (s_o=s) [13]

$$\varepsilon = \frac{l - l_o}{l_o} \tag{1}$$

where:
l – bent length, l_o – initial length

with:

$$l = \frac{\pi r}{180°} \tag{2}$$

$$\hat{\alpha} = \frac{\pi \alpha}{180°} \tag{3}$$

gives:

$$l = r\hat{\alpha} \tag{4}$$

and:

$$l_o = r_m \hat{\alpha} \tag{5}$$

consequently: $$\varepsilon_t = \frac{r\hat{\alpha} - r_m\hat{\alpha}}{r_m\hat{\alpha}} = \frac{\Delta r}{r_m} \tag{6}$$

Deformation of the outer surface $[(r]_a)$ [12, 13]:

$$r_a = r_m + \Delta r \quad \text{with} \quad \Delta r = \frac{s_0}{2} \quad \Rightarrow \quad \varepsilon_t^{ra} = +\frac{s_0}{2r_m} \quad 0 < \Delta r \leq \frac{s_0}{2} \quad \text{Elongation} \tag{7}$$

Deformation of the inner surface $[(r]_i)$ [12, 13]:

$$r_i = r_m + \Delta r \quad \text{with} \quad \Delta r = \frac{s_0}{2} \quad \Rightarrow \quad \varepsilon_t^{n} = -\frac{s_0}{2r_m} \quad -\frac{s_0}{2} \leq \Delta r < 0 \quad \text{Compression} \tag{8}$$

2.2. Calculation of blanks for angle bending (fig. 9) [7, 12, 13]

Stretched length:

$$L_z = l_1 + l_2 + \frac{\pi \alpha}{180°}\left(r_i + \frac{s_0}{2}\xi\right) \tag{9}$$

The correction factor ξ takes into consideration that the neutral fiber does not lie right in the middle.

Table 1

Correction factor

r_i/s	5,0	3,0	2,0	1,2	0,8	0,5
ξ	1,0	0,9	0,8	0,7	0,6	0,5

2.3. Resilience

The compressions and elongations occurring in the bending zone of the workpiece have to be compensated by material displacement. As a result of this develop stresses which are partly released after the bending process and cause a resilience of bent arms. The resilience characteristic is to be taken into account in all bending processes. Should accurate, form–fit bending take place, a prior determination of resilience for the purpose of constructive shaping of the workpieces is necessary [8]. Among other things, the resilience factor k is used for this purpose.

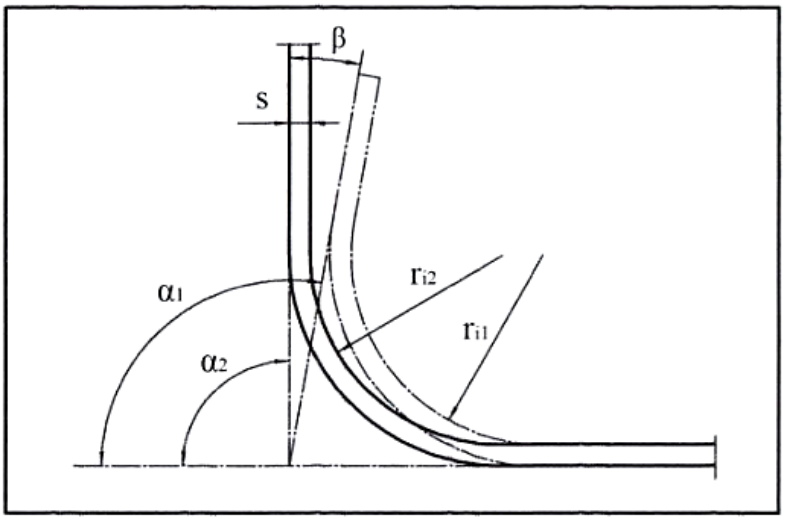

Fig. 10. Definition of the resilience factor [8]
Rys. 10. Definicja współczynnika sprężystości [8]

α_1 – angle on the tool
α_2 – angle on the workpiece
s – sheet thickness / profile diameter
r_{i1} – inside radius on the tool
r_{i2} – inside radius on the workpiece
β – deflection angle

Resilience factor [7, 8, 12, 13]:

$$k = \frac{\alpha_1}{\alpha_2} = \frac{r_{i1} + 0{,}5s}{r_{i2} + 0{,}5s} \tag{10}$$

k – in case of equal modulus of elasticity the value will increase with the material strength.

This relation results also from the equation [7, 8, 12, 13]:

$$r_{i1} = \frac{r_{i2}}{1 + \frac{r_{i2} R_m}{sE}} \tag{11}$$

Resilience comes about in the course of each bending process. There is a deviation from the set bending angle. The extent of resilience depends on:

- the yield point of the formed material,
- the kind of bending (free or form–fit bending),
- the bend radius (the smaller r is the greater the plastic deformed zone – accordingly the smaller the resilience) [7].

As a consequence: The bending tools obtain a smaller angle than the finished part. Angle or bending radius corrector [7]:

$$\beta = \alpha_1 - \alpha_2 \tag{12}$$

Table 2

Deflection angle $\beta = f(r_i, s)$ for St to $R_m = \frac{400N}{mm^2}$ and M_s to $R_m = \frac{300N}{mm^2}$

β [°]	5	3	1
s [mm]	0,1 bis 0,7	0,8 bis 1,9	2 bis 4
ri [mm]	1*s bis 5*s	1*s bis 5*s	1*s bis 5*s

Reduction of resilience:

- Correction of the tool angle,
- Resqueezing of the bending edge in a die,
- Application of an increased embossing and bending momentum,
- Bending at higher temperatures (hot bending),
- Decrease of the relative bending radius r_i/s_0,
- In principle by decreasing the resilient core zone.

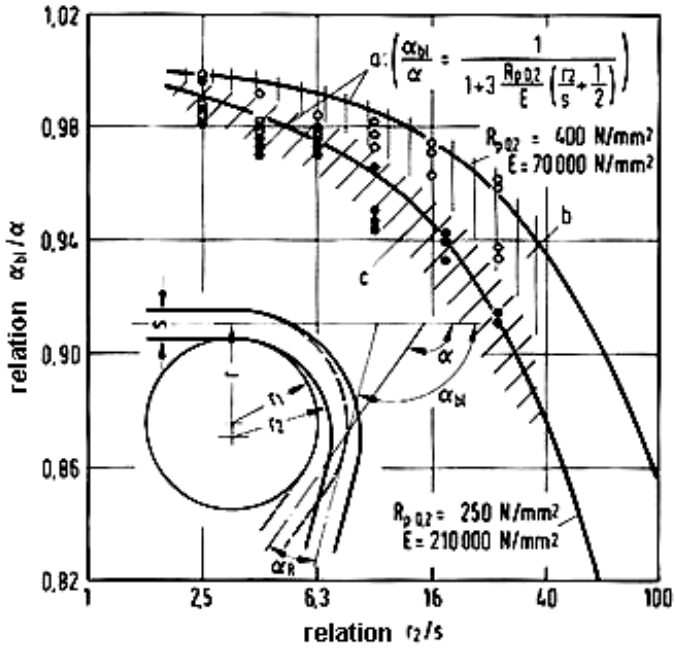

Fig. 11. Relation α_{bl}/α [11]
Rys. 11. Zależność α_{bl}/α [11]

The relationship of constant angle to the angle under load is then:

$$\frac{\alpha_{bl}}{\alpha} = \frac{1}{1 + 3\frac{R_{p0,2}}{E}\left(\frac{r_2}{s} + \frac{1}{2}\right)} \tag{13}$$

Moreover, it is frequently converted into the inside radius r_2 that remains after bending [11].

2.4. Bending force in case of free bending [12]

$$M_{max} = F_N x = F_N \frac{W}{sin\alpha} = \frac{F_{St} W}{4sin^2\alpha} \tag{14}$$

Equation of outside with inside moment $M_{max} = M_{pl}$ **(fully plastic)**:

$$\frac{F_{St}W}{4sin^2\alpha} = \frac{k_f bs^2{}_0}{4} \tag{15}$$

$$F_{St} = \frac{k_f bs^2{}_0}{W} sin^2\alpha \tag{16}$$

$$F_{Stmax} = \frac{k_f bs^2{}_0}{W} \quad \text{(at } \alpha = 90^o\text{)} \tag{17}$$

Bending force according to Mäkelt, Cali and Ohler [12]:

$$F_B = F_{Stmax} = CR_m \frac{bs^2{}_0}{W} \tag{18}$$

with:

$C = 1 + 4\frac{S_0}{W}$ for $\frac{W}{S_0} \leq 10$

$C = 1$ for $\frac{W}{S_0} > 10$

2.5. Bending of a solid stabilizer bar

In order to avoid or to reduce all undesired side effects, such as:

- Change of cross-section in the bending areas,
- Resilience,
- Unfavorable bending radii and bending planes,
- Notches, damages in the bending areas,
- Strength decrease.

an appropriate, suitable bending method for each stabilizer bar has to be selected. The construction is thus connected with the design of bending tools. Fig. 10 shows bending stages of a solid stabilizer bar in a bending machine. The tool selection and shape takes the abovementioned side effects into consideration.

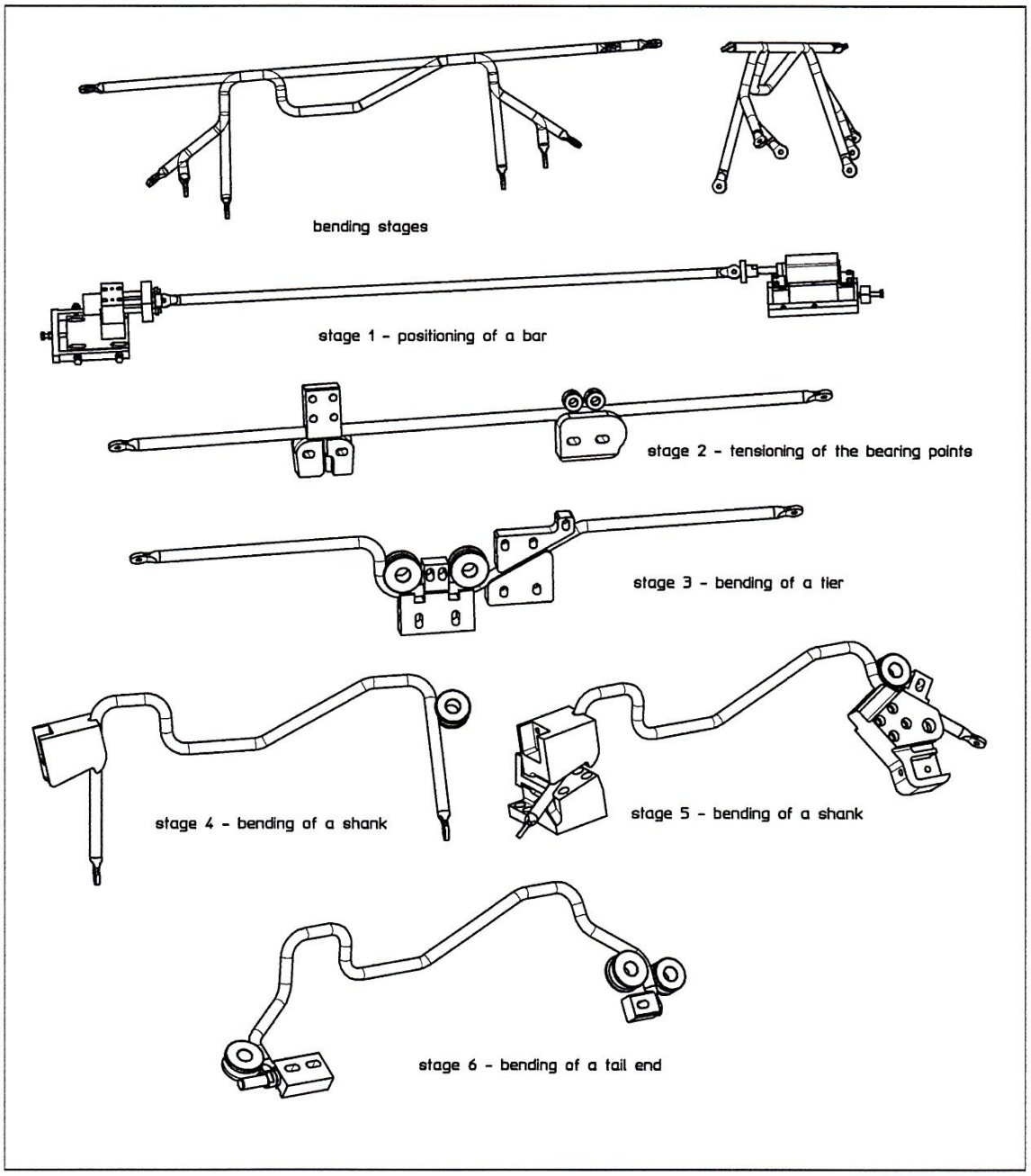

Fig. 12. Hot bending of a solid stabilizer bar – bending stages
Rys. 12. Gięcie stabilizatora prętowego na gorąco – technologiczne fazy gięcia

3. CONCLUSIONS

As we can see, the manufacturing process of stabilizer bars changed and has been further developed. The designer has to consider many factors when constructing stabilizer bars. This is of fundamental importance for successful construction and series production as well as for the quality and fatigue strength of the stabilizer bar. Stresses and deformations occurring in the stabilizer bar under load may be calculated using two different methods:

1. Analytical calculation (designing program – see Parts 1 and 2),
2. Finite Element Method (FEM).

The first method serves as a standard tool for designing stabilizer bars:

- exact solution in straight sections,
- consideration of excessive stresses (bend) by means of influencing factors,
- small parameterization effort, only central fibers and cross-section are described,
- Very fast calculation.

The second method is used for the detailed analysis of critical cases.

References

1. von Estorff H.-E.:*Technische Daten Fahrzeugfedern Teil:3 Stabilisatoren.* Stahlwerke Brüninghaus GmbH, Werk Werdohl, Hang Druck KG, Köln, 1969.
2. Ulbricht J., Vondracek H., Kindermann S.; *Warm geformte Federn – Leitfaden für Konstruktion und Fertigung.* Hoesch Werke, Hohenlimburg Schwerte AG, W. Stumpf KG, Bochum, 1973.
3. Fischer F., H.Vondracek H.: *Warm geformte Federn - Konstruktion und Fertigung.* Hoesch Werke, Hoesch Hohenlimburg AG, W.Stumpf KG, Bochum, 1987.
4. Meissner M.,.Schorcht H.-J.: *Metallfedern – Grundlagen, Werkstoffe, Berechnung, Gestaltung und Rechnereinsatz*. 2. Auflage, Springer Verlag, Ilmenau, 2007.
5. Muhs D., Wittel H., Jannasch D., Voßiek J.: *Roloff / Matek Maschinenelemente – Normung, Berechnung, Gestaltung.* 18. Auflage, Viewegs Fachbücher der Technik, Wiesbaden, 2007.
6. Jakubowicz A. Orloś Z.: Wytrzymałość materiałów. Wydanie 6, Wydawnictwa Naukowo-Techniczne, Warszawa, 1984.
7. Tschätsch H., Dietrich J.: *Praxis der Umformtechnik.* 9. Auflage, Vieweg + Teubner, Wiesbaden, 2008.
8. Klocke F., W.König W.: *Fertigungsverfahren 4 – Umformen.* 5. Auflage, Springer Verlag. Berlin – Heidelberg, 2006.
9. Meissner M., Fischer F., Wanke K., Plitzko M.: *Die Geschichte der Metallfedern und Federtechnik in Deutschland.* 1. Auflage, Universitätsverlag Ilmenau. Ilmenau, 2009.
10. Engel B.: *Biegen von Rohren.* 4 Internationale Konferenz Hydroumformung, Institut für Fertigungstechnik, Lehrstuhl für Umformtechnik, Universität Siegen, 25. Oktober, 2005.
11. Engel B.: *Rückfederung – Phänomen und plastomechanische Beschreibung*. DGM Fortbildungs-seminar Tiefziehen, Institut für Fertigungstechnik, Lehrstuhl für Umformtechnik, Universität Siegen, 12. – 13, April, 2005.
12. Hardtmann A.: *Vorlesung Fertigungstechnik I – Umformtechnik.* Technische Universität, Dresden, Institut für Produktionstechnik Professur für Umform- und Urformtechnik, Dresden Dezember, 2003.
13. Grüning K.: Umformtechnik. 4. Auflage, Vieweg Verlag. Braunschweig, 1986.
14. DIN 8586: *Fertigungsverfahren Biegeumformen – Einordnung, Unterteilung, Begriffe*. Normen-ausschuss Technische Grundlagen (NATG), September, 2003.

Received 30.05.2010; accepted in revised form 15.06.2011