ZESZYTY NAUKOWE POLITECHNIKI ŚLĄSKIEJ 1994
Seria: ELEKTRYKA z.139 Nr kol.1247

Pavel BRANDSTETTER

VŠB - Technical University Ostrava

VECTOR CONTROL OF ASYNCHRONOUS MOTOR WITH SIGNAL PROCESSOR

Summary. The paper refers to the two-processor control system with the INTEL 80 186 microprocessor and the TMS 320 10 digital signal processor provided a high-speed computing capacity. The theory of the vector control in the field coordinates of asynchronous motor has been supported by the experimental tests of the laboratory AC control drive models. The universal control system on the basis of the INTEL 80 186 microprocessor and the TMS 320 10 signal processor enables to simplify the control calculating blocks if compared to the analog version.

WEKTOROWE STEROWANIE SILNIKA ASYNCHRONICZNEGO ZA POMOCĄ PROCESORA SYGNAŁOWEGO

Streszczenie. W pracy przedstawiono problematykę wektorowego sterowania silników asynchronicznych, które w połączeniu z nowoczesnym falownikiem napięcia przedstawia perspektywiczny kierunek rozwoju regulowanych napędów elektrycznych. Badania eksperymentalne przeprowadzone na modelu laboratoryjnym potwierdziły założenia teoretyczne sterowania wektorowego. System sterowania zrealizowano na bazie mikroprocesora INTEL 80 186 i procesora sygnałowego TMS 320 10.

VEKTORREGELUNG DER ASYNCHRONMASCHINEN MIT DER SIGNALPROZESSOR

Zusammenfassung. Im Beitrag wird die Problematik der Vektorregelung der Asynchronmaschinen, die stellt in Verbindung mit modernen Frequenzumrichtern eine perspektive Richtung in der Entwicklung der elektrischen Regelantriebe vor, prasentiert. Die experimentalen Prufungen auf dem Labormodell des Drehstromregelantriebs bestatigten die theoretischen Grundlagen der Vektorrregelung der Drehstrommaschinen. Der Einsatz des entwickelten und realisierten Mikroprozessorsteuersystems auf Basis des Mikroprozessors INTEL 80 186 und Signalprozessor TMS 320 10 ermoglichte grundsatzlich die Rechenblocke gegen die analoge Version der Vektorsteuerung zu vereinfachen.

INTRODUCTION

New conception of electrical control drives was influenced by the development of semiconductor components which enabled the development of modern semiconductor frequency converters as the practical realization of modern ways of A.C. control including the control in the field coordinates of motor. The first applications of the A.C. control drives with induction and synchronous motors were using control systems based on the analog technique. Nowadays relatively efficient 16-bits microprocessors can be obtained at the foreign market which makes the choice of a small sampling period possible, permitting thus the employment of the same methods in the control circuit designs as if the analog control circuits were used. The applications of the control systems containing the high efficient microprocessors increase the reliability of the whole drive and get its set-up and starting comfortable.

1. Mathematical description of the asynchronous motor

Research of qualitatively new control methods of A.C. motors is based on the mathematical description of the universal motor with 3-phase stator and rotor windings. This model is suitable for almost all applications with the sufficient accuracy. Using the limiting conditions for stator and rotor voltage equations, this can be also used for the description of field-winding synchronous motors or permanent-magnet synchronous motors. The simplified mathematical description of the universal A.C. motor may be achieved by defining the complex space vectors. Positions of these formally adopted symbols define the positions of the maximum values of studied quantities.

Current space vectors (Fig.1) in the stator coordinate system [a,b] and rotor current space vectors in the rotor coordinate system [d,q] can be defined for the asynchronous motor, as follows:

$$i_1^S = \frac{2}{3}\,(i_{1a} + i_{1b}\,a + i_{1c}\,a^2)$$
$$i_2^R = \frac{2}{3}\,(i_{1a} + i_{2b}\,a + i_{2c}\,a^2)$$

where:

$a = e^{j\,2\pi/3}$

i_{1a}, i_{1b}, i_{1c} – instantaneous values of the phase stator currents

i_{2a}, i_{2b}, i_{2c} – instantaneous values of the phase rotor currents

Stator and rotor voltage space vectors can be defined in the similar way:

$$u_1^S = \frac{2}{3}\,(u_{1a} + u_{1b}\,a + u_{1c}\,a^2)$$
$$u_2^R = \frac{2}{3}\,(u_{2a} + u_{2b}\,a + u_{2c}\,a^2)$$

If the winding node is not brought away, we get:

$$i_{1a} + i_{1b} + i_{1c} = 0$$
$$i_{2a} + i_{2b} + i_{2c} = 0$$

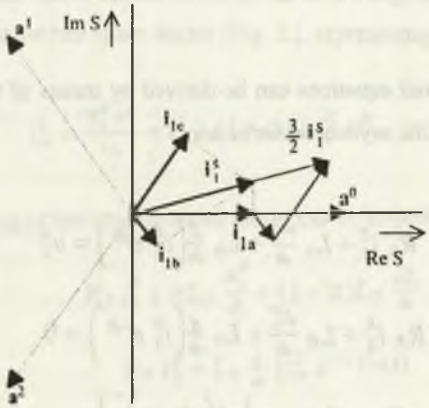

Fig.1. Stator current space vector

Rys.1. Wektor przestrzenny prądu stojana

The real axis of the stator coordinate system [α,β] is coincident with the a-phase axis of winding and the stator current space vector can be expressed, as follows:

$$i_1^S = i_{1\alpha} + j i_{1\beta}$$

Transformation from the 3-axis [a,b,c] to 2-axis [α,β] coordinate system can be accomplished using the equations:

$$\begin{bmatrix} i_{1\alpha} \\ i_{1\beta} \end{bmatrix} = \begin{bmatrix} 1 & 0 \\ \frac{1}{\sqrt{3}} & \frac{2}{\sqrt{3}} \end{bmatrix} * \begin{bmatrix} i_{1a} \\ i_{1b} \end{bmatrix} = [T\,3/2] * \begin{bmatrix} i_{1a} \\ i_{1b} \end{bmatrix}$$

The inverse transformation can be expressed by the following equations:

$$\begin{bmatrix} i_{1a} \\ i_{1b} \end{bmatrix} = \begin{bmatrix} 1 & 0 \\ -\frac{1}{2} & \frac{\sqrt{3}}{2} \end{bmatrix} * \begin{bmatrix} i_{1\alpha} \\ i_{1\beta} \end{bmatrix} = [T\,2/3] * \begin{bmatrix} i_{1\alpha} \\ i_{1\beta} \end{bmatrix}$$

System of the differential equations can be derived by means of the space vectors, which describe the behaviour of the asynchronous motor:

$$R_S\, i_1^S + L_s \frac{di_1^S}{dt} + L_h \frac{d}{dt}\left(i_2^R\, e^{j\varepsilon} \right) = u_1^S$$

$$R_R\, i_2^R + L_R \frac{di_2^R}{dt} + L_h \frac{d}{dt}\left(i_1^S\, e^{-j\varepsilon} \right) = 0$$

$$J \frac{d\omega_m}{dt} = \frac{3}{2} L_h\, Im\left| i_1^S \left(i_2^R\, e^{j\varepsilon} \right)^* \right| - m_z$$

$$\omega_m = \frac{d\varepsilon}{dt}$$

where:

- resistance of one phase of stator (rotor) winding,
- total inductance of one phase of stator (rotor) winding,
- main inductance,
- mutual angle between the real axes of the stator and rotor coordinate system,
- angular rotor speed,
- total moment of inertia,
- load torque.

Total inductances L_S, L_R can be expressed using the main inductance Lh and leakage coefficients σ_R, σ_S:

$$L_S = (1+\sigma_S)\, L_h \quad , \quad L_R = (1+\sigma_R)\, L_h$$

$$\sigma_S = \frac{L_{S\sigma}}{L_h} = \frac{L_S}{L_h} - 1 \quad , \quad \sigma_R = \frac{L_{R\sigma}}{L_h} = \frac{L_R}{L_h} - 1$$

Total leakage coefficient σ:

$$\sigma = 1 - \frac{L_h^2}{L_S L_R} = 1 - \frac{1}{(1+\sigma_S)(1+\sigma_R)}$$

As the rotor current space vector cannot be measured with a cage motor, it is eliminated by a stator based magnetising current space vector [Fig. 2.], representing rotor flux [6]:

$$i_m^S = \frac{\psi_2^R\, e^{j\varepsilon}}{L_h} = i_1^S + (1+\sigma_R)\, i_2^R\, e^{j\varepsilon}$$

The voltage equations of the asynchronous motor can be expressed, as follows:

$$R_S\, i_1^S + \sigma L_S \frac{di_1^S}{dt} + (1-\sigma) L_S \frac{di_m^S}{dt} = u_1^S$$

$$R_R\, i_2^R + L_h \frac{d}{dt}\left(i_m^S\, e^{-j\varepsilon}\right) = 0$$

This results in

$$T_R \frac{di_m^S}{dt} + (1 - j\omega_m T_R) i_m^S = i_1^S$$

Orienting the quantities from the stator coordinate system [α,β] to the system of the oriented coordinates [x,y] which is aligned with the magnetising current space vector i_m (resp. rotor flux) and rotates with the angular velocity ω_{im}, we get by mans of this equation

$$x^0 = x^S e^{-j\gamma}$$

where:

- quantity defined in the system of the oriented coordinates SOS [x,y],
- quantity defined to the stator coordinate system [α,β] SSS,
- angle between the real axes of the SOS and SSS systems,

the following equations:

$$R_S i_1^0 + \sigma L_S \frac{di_1^0}{dt} + j\omega_{im}\sigma L_S i_1^0 + (1-\sigma) L_S \frac{di_m^0}{dt} + j\omega_{im}(1-\sigma) L_s i_m^0 = u_1^0$$

$$T_R \frac{di_m^0}{dt} + j\omega_{im}\, T_R\, i_m^0 + (1 - j\omega_m T_R)\, i_m^0 = i_1^0$$

$$\omega_m = \frac{d\varepsilon}{dt} \quad , \quad \omega_{im} = \frac{d\gamma}{dt}$$

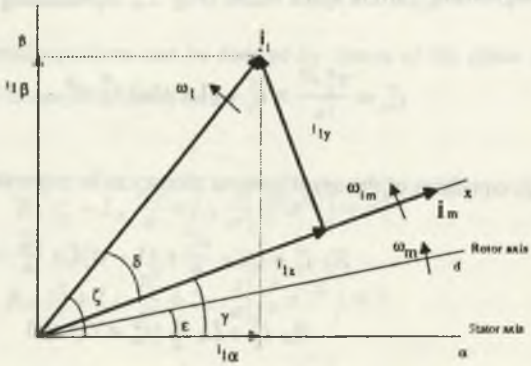

Fig.2. Angular relations of current space vectors

Rys.2. Zależności kątowe wektora przestrzennego

The following equations can be defined for the space vectors in the system of the oriented coordinates [x,y]:

$$i_1^0 = i_{1x} + j i_{1y} \quad , \quad u_1^0 = u_{1x} + j u_{1y} \quad , \quad i_m^0 = i_{mx} = i_m$$

Modifying the preceding equations, we get the system of equations, which describe behaviour of asynchronous motors in the system of the oriented coordinates [x,y]:

$$\sigma T_S \frac{di_{1x}}{dt} + i_{1x} = \frac{u_{1x}}{R_S} + \omega_{im}\sigma T_S\, i_{1y} - (1-\sigma)T_S \frac{di_m}{dt}$$

$$\sigma T_S \frac{di_{1y}}{dt} + i_{1y} = \frac{u_{1y}}{R_S} - \omega_{im}\sigma T_S\, i_{1x} - (1-\sigma)\omega_{im} T_S i_m$$

$$T_R \frac{di_m}{dt} + i_m = i_{1x}$$

$$\omega_2 = \omega_1 - \omega_m = \frac{1}{i_m T_R}\, i_{1y}$$

$$J\frac{d\omega_m}{dt} = \frac{3}{2}\frac{L_h}{1+\sigma_R}\, i_m\, i_{1y} - m_z$$

$$\omega_m = \frac{d\varepsilon}{dt} \quad , \quad \omega_{im} = \frac{d\gamma}{dt} \quad , \quad \omega_1 = \omega_{im} + \frac{d\delta}{dt} = \frac{d\zeta}{dt}$$

$$T_S = \frac{L_S}{R_S} \quad , \quad T_R = \frac{L_R}{R_R}$$

$$\zeta = \gamma + \delta$$

2. Mathematical description of frequency converter

Asynchronous motors for the low and middle power A.C. servo-drives applications are fed by indirect frequency converters with a voltage intermediate circuit. This type of frequency converter consists of a non-controlled rectifier with a smoothing filter and a bridge inverter section. Basically, the output voltage can be controlled by these ways:

a) pulse-width modulation and its modification for the higher harmonics elimination - this control is based on the comparation of reference and sinusoidal voltages,

b) direct vector control of frequency converters - this control is very perspective at present, namely for servo-drives with high dynamic requirements.

Simplification of the mathematical description of indirect frequency converter with voltage intermediate circuit may be achieved if we suppose a constant intermediate circuit voltage for the description of dynamic behaviour. This requirement is often met because of an intermediate circuit capacitor battery capacitance.

The phase output voltage of the converter can be expressed by this equation:

$$u_{1a} = K_M\, u_{sa}\,(t - T_M)$$

where K_M gain of frequency converter, T_M time delay of frequency converter. The gain of frequency converter can be defined by this equation:

$$K_M = k_s \frac{U_{MO}}{U_{smax}}$$

where ks control coefficient of frequency converter (k_s=3/4 for standard sine-triangle modulation, $k_s=\sqrt{3}/2$ for vector control), U_{MO} intermediate circuit voltage, U_{smax} maximum control voltage.

The time delay of frequency converter can be defined by means of the switching period T_s of the converter:

$$T_M \cong \frac{T_S}{3} = \frac{1}{3f_s}$$

Analogically, the equations for the other phases can be expressed. Using the space vectors, we get the voltage equation in the stator coordinate system:

$$u_1^S = K_M\, u_s^S\,(t - T_M)$$

The following equation can be obtained by vector transmitting into the rotor coordinate system:

$$u_1^R = K_M\, u_s^R\,(t - T_M)\, e^{-j\omega_m T_M}$$

$$u_1^0 = K_M\, u_s^0\,(t - T_M)\, e^{-j\omega_{im} T_M}$$

3. Calculation of magnetising current magnitude and orienting quntities

The magnetising current magnitude i_m and orienting quantities sinγ, cosγ can be calculated by the following equations:

$$i_1^R = i_m^R + T_R \frac{di_m^R}{dt}$$

$$i_{1d} = i_{md} + T_R \frac{di_{md}}{dt}$$

$$i_{1q} = i_{mq} + T_R \frac{di_{mq}}{dt}$$

$$i_m = \sqrt{i_{m\alpha}^2 + i_{m\beta}^2}$$

$$\sin\gamma = \frac{i_{m\beta}}{i_m} \quad , \quad \cos\gamma = \frac{i_{m\alpha}}{i_m} .$$

4. Speed control structure of asynchronous motor with vector control

Proposal to the speed control structure of synchronous motor is based on the mathematical description of asynchronous motor and frequency converter. The current controlled structure consists of the power unit of frequency converter and asynchronous motor.

It can be seen in the equations of the asynchronous motor, that the coupling between the current vector components has not been cancelled. This coupling may be cancelled very simply according to the following equations:

$$u_{xe} = \omega_{im}\, \sigma L_S\, i_{1y}$$

$$u_{ye} = -[\omega_{im}\, \sigma L_S\, i_{1x} + \omega_{im}\, (1-\sigma)\, L_S\, i_m]$$

The first members of the equations represent the voltage drop of the resulting reactance. The second member of the second equation represents the rotating voltage resulting from rotating of asynchronous motor rotor.

The mutual coupliny may be cancelled by adding the signals to the outputs of current controllers. The current controlled structure can be described by the transfer function of an inertial element with the time constant

$$T_I = \sigma T_S = \sigma \frac{L_S}{R_S}$$

The control structure of frequency converter may be described by the equations in chap 2. If we express this equation using the components, we get:

$$u_{1x} = K_M(t - T_M)[u_{sx}\cos(\omega_{im}T_M) + u_{sy}\sin(\omega_{im}T_M)]$$
$$u_{1y} = K_M(t - T_M)[-u_{sx}\sin(\omega_{im}T_M) + u_{sy}\cos(\omega_{im}T_M)]$$

It can be seen that there is again mutual coupling between axis control voltages. The following conditions must be fulfilled in order to cancel the mutual coupling between the components x,y:

$$T_I >> T_M \quad , \quad \omega_{im}T_M << 1$$

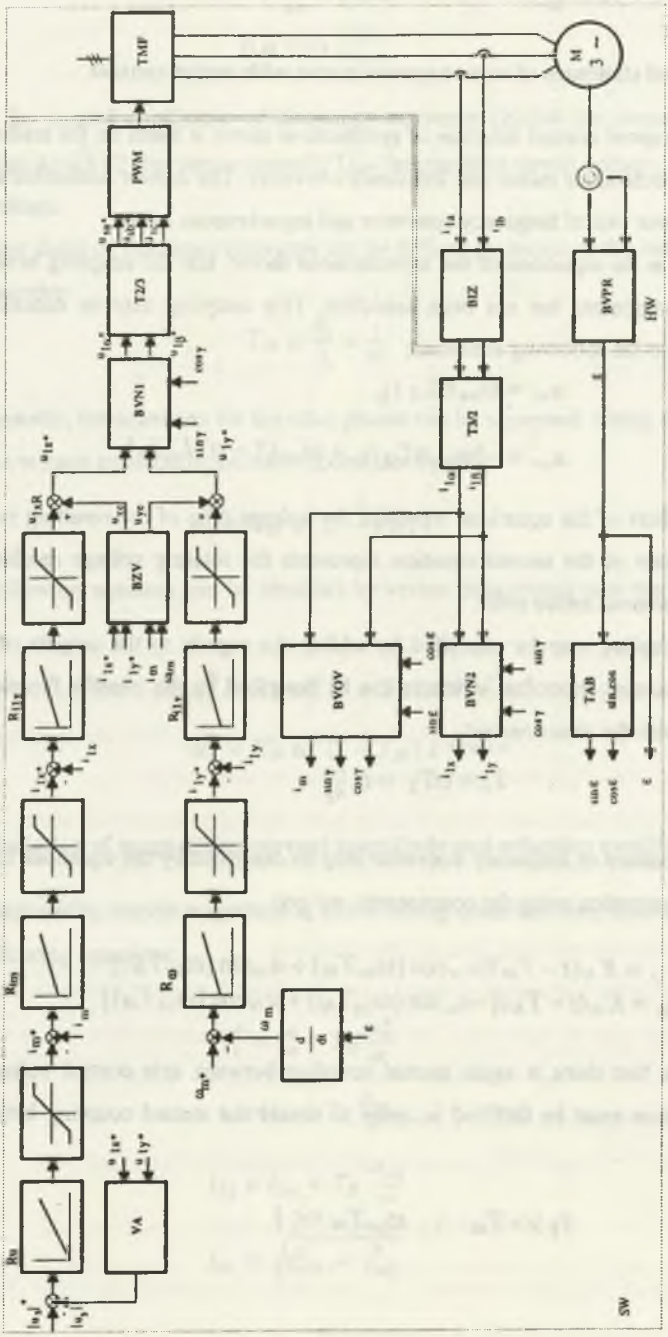

Fig.3. Speed control structure of asynchronous motor with vector control

Rys.3. Struktura wektorowej regulacji prędkości silnika asynchronicznego

If the conditions are not fulfilled, it is necessary to compensate the phase displacement which is caused by the time delay of frequency converter. Compensation may be accomplished by vector transmitting of the current components $i_{1\alpha}$, $i_{1\beta}$ into the coordinate system [x,y] and the voltage components u_{1x}, u_{1y} into the stator coordinate system [α,β] by means of the resulting field-orienting angle:

$$\gamma_v = \gamma + \omega_{im} T_M$$

Similarly, the phase error caused by the final computing speed of the microcomputer can be compensated. Compensation can be achieved by adding the value

$$T_v = 1,5\, T_{oi}$$

to the time delay T_M, there T_{oi} is the sample period of the current control loop. The resulting field-orienting angle can be expressed then, as follows:

$$\gamma_v = \gamma + \omega_{im} (T_M + T_v)$$

Cancelling the mutual coupling between the components x,y the control part of frequency converter will be described by the transfer function of an inertial element with the time constant T_M.

The final transfer function of the power and control parts with current transducers with gain K_I and A/D converter with gain K_{AD} is given by the final gain $K_M K_I K_{AD}/R_S$, high value of the time constant T_I and the low value of the time constant T_{NKi}. The PI controller can be designed for this system using the optimum-module method. This controller is designed for the separate current components in the axes s,y.

The PI controller of the magnetising current (resp. rotor flux) can be designed for this system using the optimum-module method:

$$T_R \frac{di_m}{dt} + i_m = i_{1x}$$

There is also superior speed controller for the current loop in the axis y as in the case of the D.C. speed control drives. The speed controller can be designed by the symmetrical-optimum method for the transfer function ensued from the torque equation and the transfer function of the closed current loop in the axis y.

The speed control structure of the asynchronous motor with vector control in the system of the oriented coordinates [x,y] is shown in Fig.3. The SW part is solved by software and the HW part determines the needed hardware.

5. Microprocessor control system

Adjustable speed electric drives, particularly the A.C. drives have the high requirements on a response speed of the control system and a computing capacity in the case of the microprocessor control system. High computing demands are given especially by vector computing operations, extensive communication with peripheries and extensive interruption system, which is necessary for a real time processing.

The microprocessor-based control system consists of two processors -the INTEL 80 186 processor and the TMS 320 10 signal processor. The block diagram of the system including peripheral circuits is shown in Figure 4. The features of the processors mentioned above determine their functions in the microprocessor system. Both of the processors work separately their mutual communication being provided by the special communication RAM. The processors execute different software tasks.

The block diagram of the microcontroller with INTEL 80 186 is shown in Figure 5. The INTEL 80 186 is 16 - bit advanced modification of the 8086 microprocessor. It is based on the Execution Subprocessor Unit designed to execute instructions and the Bus Interface Unit provided for selecting instructions, reading operands and writing results. Both of the units are relatively independent each other and their functions may be covered. Together they form the Central Processor Unit. In addition, the INTEL 80 186 contains the clock generator, the programmable interrupt controller, three 16-bit contains, programmable DMA unit and the peripheral chip-select logic. The INTEL 80 186 itself contains these useful circuits and so they need not be added as it is common for the majority of other processors. Direct memory addressing capability is up-to 1 Mbyte which is used for data, program and stack. The read/write cycle time may be prolonged when used the low-speed periphery.

The block diagram of the microcontroller with TMS 320 10 is shown in Figure 6. The TMS 320 10 manufactured by Texas Instruments was the first commercially successful and widely spread signal processor. This type of signal processor was selected for AC drive control system development due to its reasonable price and also thanks to enough information about it. The processor is manufactured by NMOS technology and instruction cycle time is

200ns (most instructions - including the multiplication - need only one cycle). The processor provides 288 words RAM memory on chip and 8 kByte of external program memory can be addressed. The data length is 16-bit with internal 32-bit accumulator.

The TMS 320 10 is a modern architecture 16-bit signal processor supported by 32-bit arithmetic. High-speed instruction set is the main advantage of the processor. Instruction cycle length is 200ns and most of the instructions including multiplication are performed as one-cycle instructions. High speed of multiplication operations is enabled by the hardware multiplier placed right on the processor chip. On the other side there are some limitations

- small size of the external program memory (4k x 16 bits)
- small size of the internal data memory placed into two banks (1 bank - 128 x 16 bits, 2 bank - 16 x 16 bits)
- single interrupt input
- small size of the stack (4 x 12 bits)
- difficult connections to the low-speed peripheries

The microcomputer structure is designed with respect to communication with parallel or master computer. For research reasons the microcomputer is provided with the high-speed RAM memory for program and program is written to this RAM by cooperating computer. Whole control system contains the cooperating processor INTEL 80 186 with its own RAM, EPROM and MUART which communicates via serial port with PC. This PC serves as an intelligent terminal. The INTEL 80 186 processor is also connected to the A/D and D/A converters, speed sensor and orientation angle estimate circuit. Cooperating processor is also utilized for recording of transients during drive operation.

Software for this control system is designed as modular blocks where each block represents some common used task as PI controller, axis transformation etc... This solution enables fast and comfortable assembly of control program according to the block diagram of control structure. Control software consists of two programs. The first program is executed by the INTEL 80 186 processor. This program provides communication of control system with operator and also provides input data acquisition and control quantities output for control process. The second program is executed by the TMS 320 10 signal processor. This program proceeds all computation of control structure and due to high performance of the TMS 320 10 processor allows to achieve short repeating period of control loops.

A/D converter board consists of eight 12-bit channels sampled at the same time and transferred step by step. Result value is stored at the FIFO memories. Sampling all channels

at the same time is very important condition. Unfortunately it is not realized at all manufactured boards. All channels have the common signal ground and one bipolar voltage range ± 10 V. For this reason all measured signals are galvanically separated and amplified into ± 10 V level. It is possible to measure various number of channels. Transfer time of one channel is 16 μs. The A/D converter board is placed in the INTEL 80 186 memory space. The reading of individual measured channels proceeds from the same address in the sequence they have been transferred. Initialization and start-up are accomplished by writing the command word at next addresses.

D/A converter board consists of eight 12-bit converters with the bipolar range ± 10 V. The communication between various channels is very fast since they are right in the INTEL 80 186 memory space. The position evaluating board consists of 12-bit bidirectional counter provided to add or substract invremental coder pulses according to the signal phase. This board is placed in the INTEL 80 186 memory space.

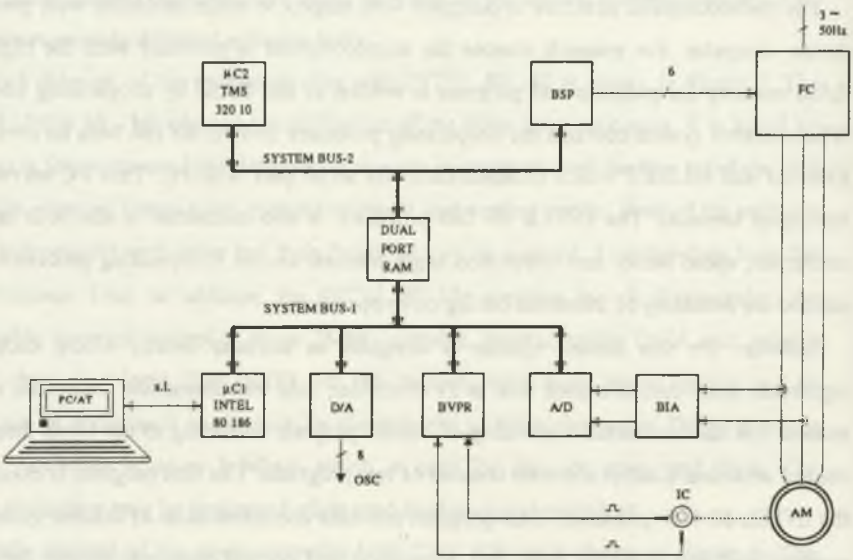

Fig.4. Control system with microprocessor I80 186 and signal processor TMS 320 10

Rys.4. Dwuprocesorowy system sterowania z mikroprocesorem I80 186 i procesorem sygnałowym TMS 320 10

The connecting memory board is placed in the memory space of both processors. It is a special dual-port RAM memory, enabled to solve contemporary accesses to the memory. If the memory is not ready to accept the 80 186 processor data, the ARDY input is activated to prolong read/write cycle. If the memory is not ready to accept the TMS 320 10 data, the BIO input is activated and tested just before writing or reading. When the BIO input is active the processor is in the waiting condition.

The BSP board enables the driving of power drive elements through the optocouplers. The address is in the TMS 320 10 I/O space.

The INTEL 80 186 program can be divided into three basic tasks. the tasks are executed according to their priority.The highest priority (i level) program reads input data and writes output quantities for the current control loop processed by the TMS 320 10 processor. Program which is provided to record some important external and internal values into the memory works with the same priority.

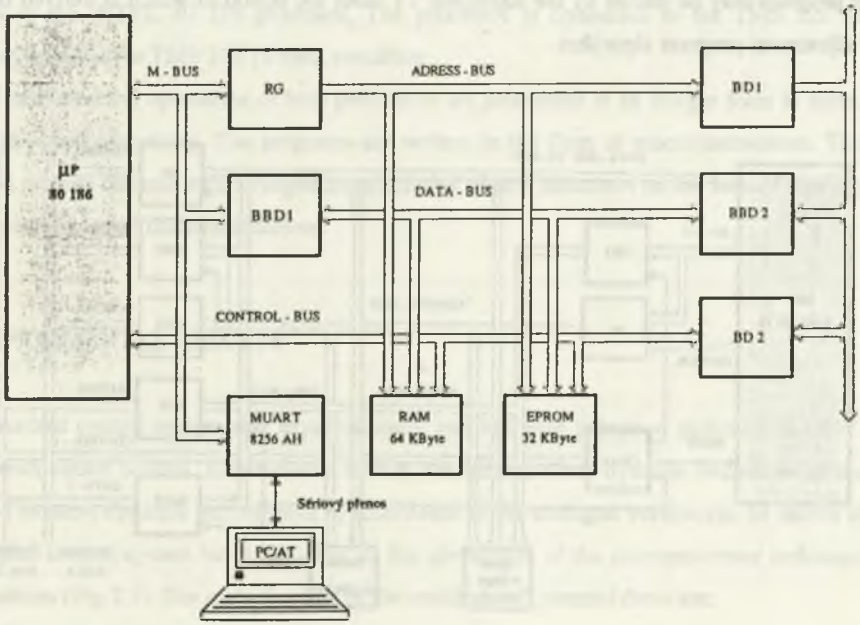

Fig.5. Microcontroller with INTEL 80 186

Rys.5. System mikroprocesorowy z układem INTEL 80 186

Lower priority (II level) program evaluates velocity for the speed control loop. The lowest priority (III level) program provides the communication with user and enables the desired velocity and controller parameters adjustment. The communication is provided by the RS 232 serial interface with terminal using ASCII codes. This program is also provided to display actual external and interval values at a four-channel oscilloscope or they can be sent through the serial port to PC where they can be processed.

The accurate start-up of programs is insured by two INTEL 80 186 internal timers (T0 and T2). T0 timer generates CPU interrupt at the interval of 255μs (it is the same for the TMS 320 10 processor). T2 timer interval is determined by two factors - type of an incremental encoder and velocity calculating method. The incremental encoder with 4096 pulses per revolution and T2 timer interval of 5 ms has been used.

The 80 186 processor of this control system is not fully used. It could be also used for actual drive parameters adjustment during the operation. This program may be incorporated into II level or III level system or it can be processed with the priority between II and III. This program may be started by the additional T1 timer the period of which is derived from the adjustment program algorithm.

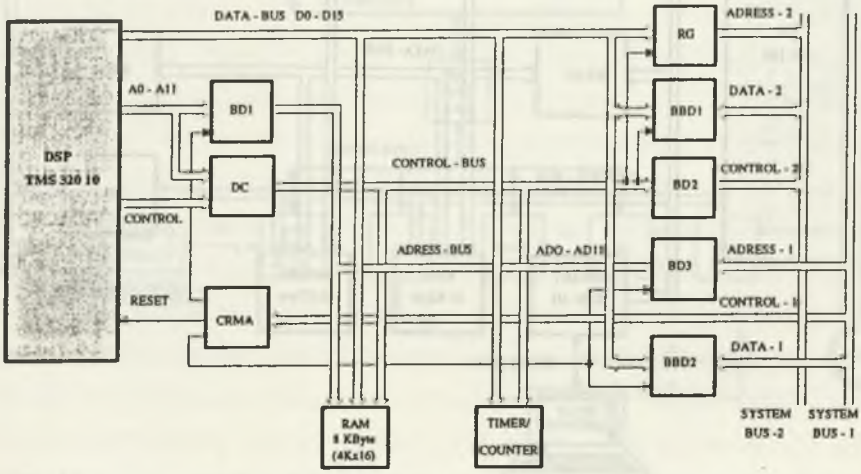

Fig.6. Microcontroller with signal processor TMS 320 10

Rys.6. System mikroprocesorowy z procesorem sygnałowym TMS 320 10

Whole program including the TMS 320 10 processor program is transferred from the system to PC via a serial communication RS 232 interface. Basis program for system initialization and serial line communication is incorporated into the INTEL 80 186 EPROM memory. The TMS 320 10 processor is provided to calculate the control structure of the drive. The program can be again divided into 3 or 4 basic tasks according to the extent of control structure. As the tasks cannot be solved by the processor with one interrupt level at the same time, they are processed according to the priority defined by software.

The highest priority (I level) program is used for the PWM with carrier frequency of 4 kHz. This program is involved when the voltage source inverter is used. Medium priority (II level) program is provided to calculate the whole control structure except the velocity control loop. Lower priority (III level) program allows to calculate the velocity control loop. The lowest priority (IV level) program serves for controller parameters recalculation and communication with the INTEL 80 186 processor. Parameters may be transferred at all program levels. The start-up times of program levels are 15 μs for the I level, 255 μs for the II level, 5 ms for the III level. Whole program is transferred to the program memory by means of the INTEL 80 186 processor. The processor is connected to the TMS 320 10 memory space at the TMS 320 10 reset condition.

All mathematical operations of both processors are proceeded at an integer form to insure the high-speed processing. The programs are written in the form of macroinstructions. This method permits fast and well-arranged programming of new structures on the base of recently debugged and tested macroinstructions.

EXPERIMENTAL RESULTS

Described control system was experimentally verified with induction motor (P=2,7 kW) drive with vector control. Experimental results confirm excellent dynamic behaviour of the drive. The same dynamic performance in accordance to the analogue version can be shown at the digital control system but it has even all the advantages of the microprocessor technique applications (Fig.7,8). The main features of the realized A.C. control drive are:

* four-quadrant operation,
* speed range (U_{MO}=250 V).....-1000r.p.m.+1000 r.p.m.
* floating speed under reversation +100 r.p.m. ⇒ -100 r.p.m. without load .....< 50 ms

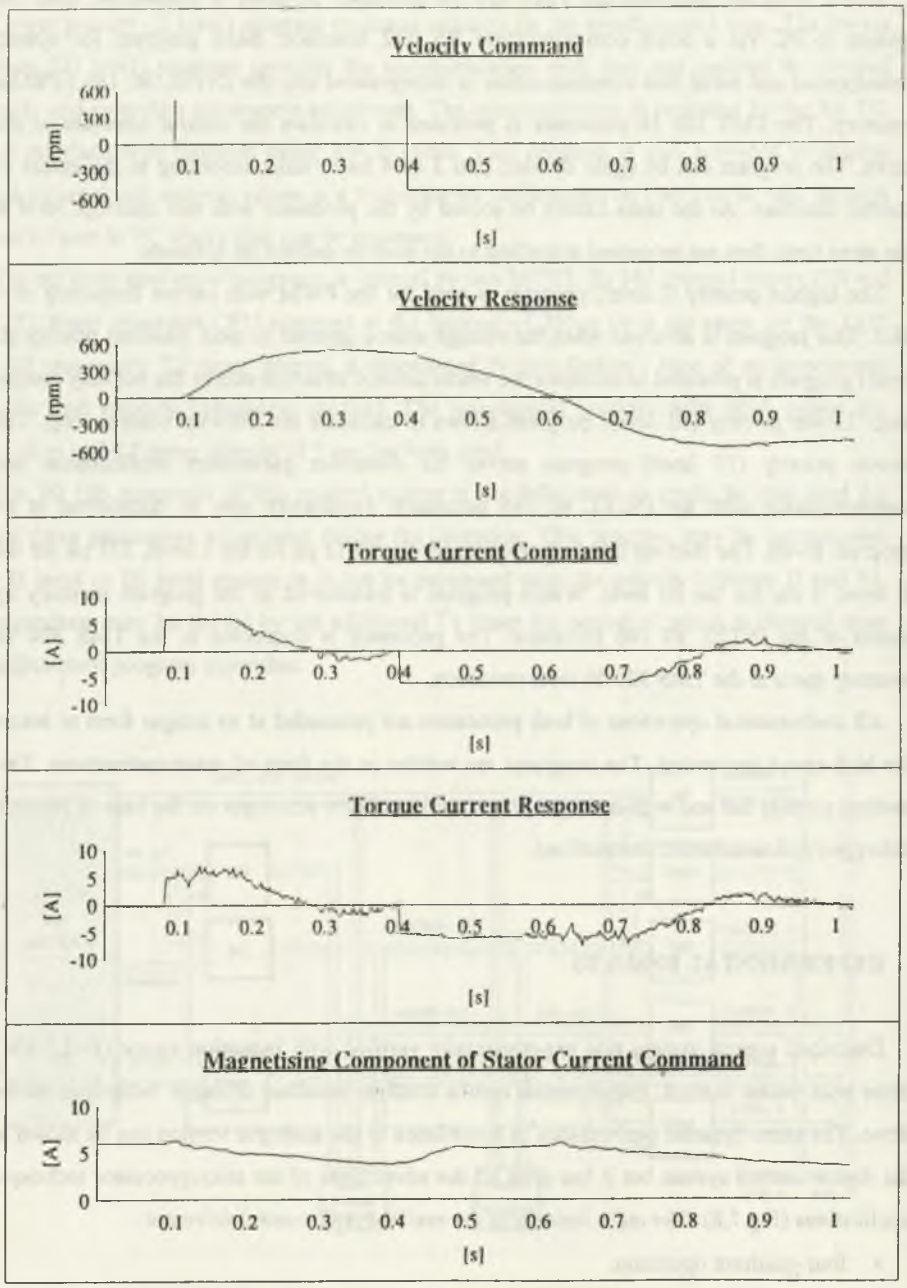

Fig.7. Waveform of quantities during starting and reversation +/- 500 rpm

Rys.7. Przebiegi wybranych wielkości elektrycznych i mechanicznych w czasie rozruchu i zmiany kierunku wirowania +/- 500 obr/min

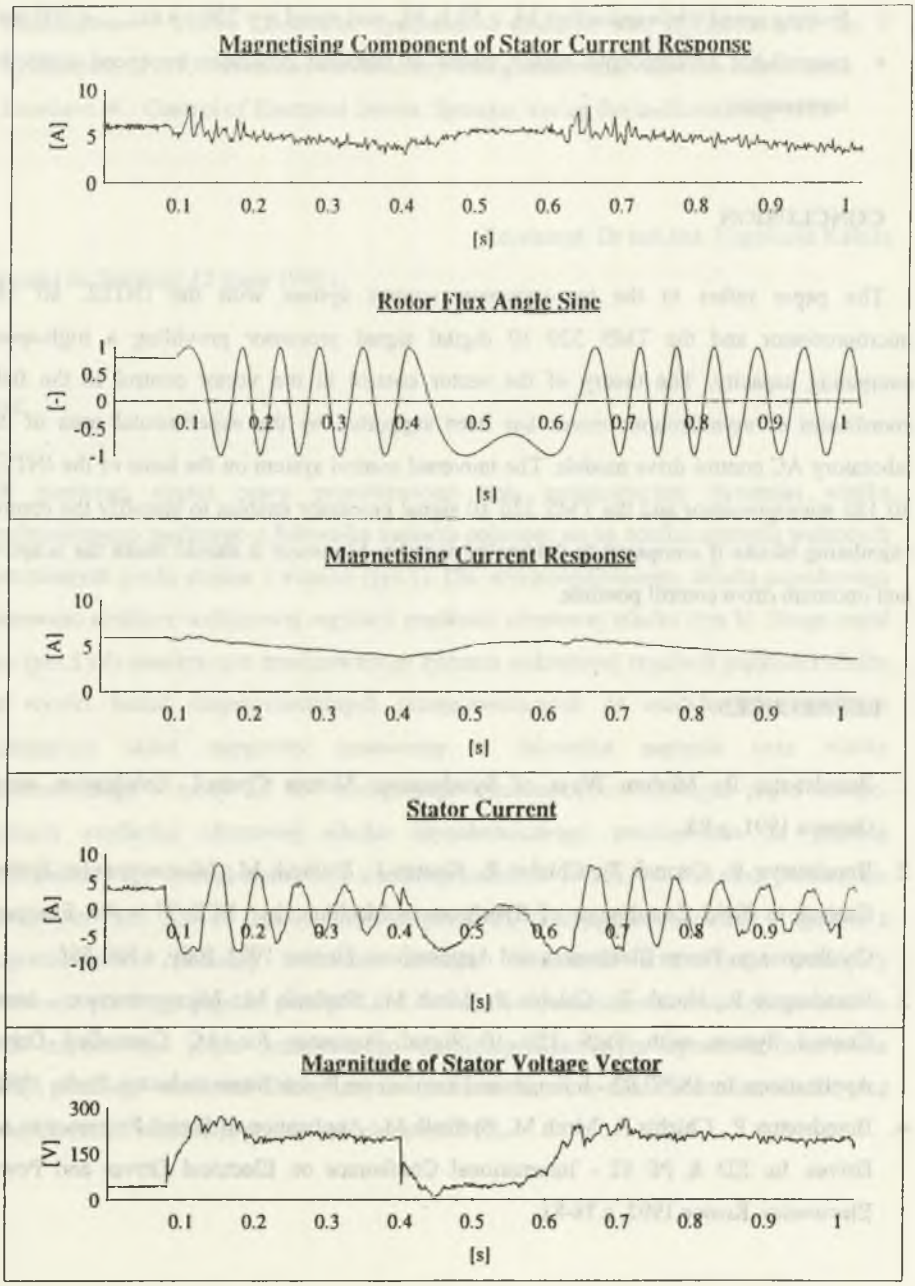

Fig.8. Waveform of quantities during starting and reversation +/= 500 rpm

Rys.8. Przebiegi wybranych wielkości elektrycznych i mechanicznych w czasie rozruchu i zmiany kierunku wirowania +/- 500 obr/min.

floating speed while unloading $M_z > 50\ \%\ M_n$, and speed n = 200 r.p.m.,,,, ..< 100 ms

* controllable asynchronous motor torque at transient processes by speed controller suppression.

CONCLUSION

The paper refers to the two-processor control system with the INTEL 80 186 microprocessor and the TMS 320 10 digital signal processor providing a high-speed computing capacity. The theory of the vector control in the vector control in the field coordinates of asynchronous motor has been supported by the experimental tests of the laboratory AC control drive models. The universal control system on the basis of the INTEL 80 186 microprocessor and the TMS 320 10 signal processor enables to simplify the control calculating blocks if compared to the analog version. Moreover it should make the adaptive and optimum drive control possible.

REFERENCES

1. Brandstetter P.: Modern Ways of Synchronous Motors Control, Habilitation work, Ostrava 1991, p.95.
2. Brandstetter P., Cermak T., Chlebis P., Kozina J., Stefanik M.: Microcomputer System Control in Field Coordinates of Synchronous Machine. In.: ECE 91 - 4th European Conference on Power Elektronics and Applications. Firenze 1991, Italy, s.560-565.
3. Brandstetter P., Horak T., Chlebis P., Mech M., Stefanik M.: Microprocessor - based Control System with TMS 320 10 Signal Processor for AC Controlled Drives Applications. In: ISPS' 92 - International Seminar on Power Semiconductor. Praha 1992.
4. Brandstetter P., Chlebis P., Mech M., Stefanik M.: Application of Signal Processor in AC Drives. In: ED & PE 92 - International Conference on Electrical Drives and Power Electronics. Kosice 1992, s.78-81.

5. Brandstetter P.: Vector Control of Synchronous Machine with Cycloconverter. In: V Sympozjum PPE 93 - Podstawowe Problemy Energoelektroniki. Gliwice-Ustroń 1993.
6. Leonhard W.: Control of Electrical Drives. Springer Verlag Berlin-Heidelberg 1985.

Recenzent: Dr hab.inż. Eugeniusz Kałuża

Wpłynęło do Redakcji 12 maja 1993 r.

Skrót

W pierwszej części pracy przedstawiono opis matematyczny dynamiki silnika asynchronicznego zasilanego z falownika napięcia opierając się na zdefiniowanych wektorach przestrzennych prądu stojana i wirnika (rys.1). Dla wyszczególnionego układu napędowego opracowano strukturę wektorowej regulacji prędkości obrotowej silnika (rys.3). Druga część pracy (pkt 5 i 6) zawiera opis zrealizowanego systemu wektorowej regulacji prędkości silnika oraz wyniki badań eksperymentalnych przeprowadzonych na modelu laboratoryjnym obejmującym układ napędowy zestawiony z falownika napięcia oraz silnika asynchronicznego o mocy 2,7 kW obciążonego silnikiem obcowzbudnym prądu stałego. Regulację prędkości obrotowej silnika asynchronicznego zrealizowano za pomocą dwuprocesorowego sytemu sterowania z mikroprocesorem INTEL 80 186 oraz procesorem sygnałowym TMS 320 10 (rys.4). Obydwa procesory pracują autonomicznie i zgodnie z oprogramowaniem realizują oddzielne zadania. Wzajemna komunikacja pomiędzy procesorami przebiega poprzez pamięć RAM. Własności dynamiczne laboratoryjnego modelu układu napędowego prądu przemiennego z mikroprocesorowym systemem sterowania ilustrują przebiegi wielkości elektrycznych i mechanicznych w czasie rozruchu silnika oraz zmiany kierunku wirowania przedstawione na rys.7 i 8.